CHANGE ORDER JUSTIFICATION

PROJECT:	Index-Galena Road Flood Repair	PROJECT #:	RC1532, RC1774, RR6322
PROJECT ENGINEER:	Sam Chi	FED AID #:	ER-0701(063)

WRITTEN JUSTIFICATION

1. DESCRIPTION OF CHANGE.

This Change Order addresses two modifications to the steel bridge girders at the following locations:

1. Modifies the bottom bridge girder flange width at Pier 1 to match the designed disc bearing connection and details. The following replacement plans sheets BR14, BR15, BR18, and BR19 are affected by this change and will be issued with this Change Order.

2. Modifies the girder splice details for the top and bottom girder flange by increasing the length and thickness of the splice plates; and modifies the bolting arrangements and bolt lengths. The following replacement plans sheets BR20 and BR21 are affected by this change and will be issued with this Change Order.

2. WHAT IS REQUIRED BY CONTRACT? WHY THE CHANGE? (REFERENCE PLAN SHEETS & SPEC SECTIONS.)

The Contractor requested clarification of a discrepancy in the contract plans via RFI 004 on April 9, 2021. RFI 004 noted that on bridge sheet BR14, the pier 1 bearing detail shows the bottom girder flange at Pier 1 as 35 inches wide, while sheet BR18 shows the bottom flange as 24 inches wide. The Engineer of Record (EOR) responded that the Bottom Flange at Pier 1 must be 35 inches wide to match the bearing sole plate and can taper down to 24 inches wide. The EOR provided revised plans (BR14, BR15, BR18, BR19) with the response to RFI 004 detailing this change.

Upon completing the bridge load rating for new bridge per RFI 022, the EOR requested that we upsize the top and bottom flange splice plates; and modify the splice plate bolting arrangement to improve the load rating factor of safety. The plans include details for two field splices on each of the three girders. Plan Sheets BR20 and BR21 were revised by the EOR to reflect the changes to the splice plates and bolting arrangements. These plan sheets were issued in SnoCo Serial Letter 007 dated July 30, 2021 notifying the Contractor of the change.

This change order provides compensation to the Contractor for additional materials, labor and equipment cost for fabrication and installation in the field.

3. HOW IS CHANGE ORDER THE SOLUTION?

This is an owner-initiated change. A Change Order is needed to incorporate the changes to the Contract and compensate the Contractor for added work.

This Change Order will add a new lump sum item and revised plan sheets to the Contract.

4. ALTERNATIVE(S) CONSIDERED.

No other alternatives were considered, the plans must be corrected as noted to avoid fabrication and construction errors.

5. REASON FOR ENTITLEMENT AND WHY IT CANNOT BE PAID UNDER EXISTING CONTRACT.

The Contractor is entitled to an equitable adjustment for the added work associated with providing the added steel, revised hardware and any additional fabrication costs associated with these revisions.

PROJECT:	Index-Galena Road Flood Repair	PROJECT #:	RC1532, RC1774, RR6322
PROJECT ENGINEER:	Sam Chi	FED AID #:	ER-0701(063)

6. APPROVALS: PROJECT MANAGER, TECHNICAL ADVISOR (TRAFFIC, STRUCTURAL), JURISDICTION, OTHER AGENCY.

Standard change order approval (Construction Manager, Engineering Services Director).

7. TIME: INCREASE OR DECREASE WORKING DAYS.

Contract time is not affected by this change.

8. COST: ESTABLISH OR VERIFY INCREASE OR DECREASE. (CONTRACTOR PROPOSAL, ENGINEER'S ESTIMATE, NEGOTIATED, SUPPLIER, BID ITEM, ETC.)

We have reached agreement on an equitable adjustment for this added work. The County verified costs with the Engineer of Record - WSP. For the girder flange width changes, WSP's independent cost estimate was $848 less than that proposed. For the splice plate changes, WSP's independent cost estimate was approximately $9k less than that proposed. This was primarily attributed to the difference in steel weights used in both estimates. WSP used only the "added" steel weight associated with the increased splice plate thickness (7/8" to 1-1/4"). Whereas the fabricator provided pricing for the new 1-1/4" thick splice plates. We agreed since the fabricator purchased the steel for the original splice plates prior to this owner-initiated change, the County would be responsible for the material cost of the new splice plates purchased.

Agreed costs for the two steel girder changes are as follows:

1. Girder Flange Width change: $15,048.23
2. Splice Plate change: $25,500.00

ATTACH BACKUP DOCUMENTATION:

Highmark COR-01 Flange Width, 16 pages
Highmark COR-02 Splice Plates, 11 pages
WSP Est - COR1 Flange Width, 1 page
WSP Est - COR2 Splice Plate, 3 pages

Index-Galena COR 1 Girder Flange Width to Match Bearing

CHANGE ORDER #6
12/9/2021
Justification Attachment 1
Page 3 of 33

Highmark Concrete Contractors, LLC

P.O. Box 1713
Buckley, WA 98321
Contact: **Dan Sharpe**
Phone: **(206) 900-3237**
Fax: **360-829-5473**

Quote To: Goodfellow Brothers
Phone:
Fax:

Job Name: Index-Galena COR 1 Girder Flange Widt
Revision 1

HCC Acknowledges No Addendum

ITEM	DESCRIPTION	QUANTITY	UNIT	UNIT PRICE	AMOUNT
COR 1	Plate Girder Flange Width Adjustment	1.00	LS	15,048.23	15,048.23

GRAND TOTAL **$15,048.23**

NOTES:

INCLUSIONS:

Listed items only

Union Labor

Safety items required to do the work

wider girder flanger per RFI 1.

Retension Bond.

Standard Markup Instructions

	Cost Basis	Markup %	Markup
Labor	0	29.00	0
Burden	0	29.00	0
Perm Matl	12,370	21.00	2,598
Const Matl	0	21.00	0
Sub	0	12.00	0
Eq Op. Exps	0	21.00	0
Co Equip	0	21.00	0
Rented Eqp	0	21.00	0
Trucking	0	29.00	0
Civil	0	12.00	0
Misc3	0	0.00	0
Overrides	0	0.00	0
Use Avg: ☐	12,370	21.00	2,598

CLARIFICATIONS/ASSUMPTIONS:

Conditions of Subcontract Apply

Owner/General to supply access to work zone adequate for HCC equipment/crew to complete quoted items.

All soils assumed clean (non-contaminated)

Suitable existing subgrade material to build on

Work completed 2022

Continuous, Sequential work for all items

Mutually agreed upon schedule

Totals as of Last Spread

	Cost	Markup	Total
Direct	12,370	2,598	14,968
Indirect	0	0	0
Addons	80	0	80
Bond	0		0
SubTotal	12,450	2,598	15,048
Pass Through	0		0
Total	12,450	2,598	15,048

Assumed all overhead/underground power lines, utilities, and/or obstructions will be removed and/or protected from work area at no cost to HCC

Price good for 30-days.

The terms of this proposal will be included in any subcontract agreement or Addendum

Pricing (Tax) based on WSDOT Standard Specification 1-07.2(1), WAC 458-20-171.

EXCLUSIONS

Any Temporary Erosion Sediment Control (TESC) measures

Demolition and removal of any kind including Mockups and/or test slabs

Temp facilities - Restrooms, Garbage Dumpster's, Lighting (to be provided by GC)

Overtime, night, and weekend work, and associated costs like night plant premiums

Sand Blasting, Paint, Pigmented Sealer, anti-graffiti, exposed aggregate finishes

Supply of embedded materials (i.e. anchor bolts, conduit, handrail, etc.)

Drainage, or water management

Dewatering, including but necessarily limited to Surface Water Monitoring & Testing

All Grading, base course, subgrade & materials

Concrete spoils due to deep grade or patches out by prime

Fencing/railing - (temporary and/or permanent)

Welding

Ready Mix &/or Concrete Pump Truck Washout Areas (To be provided by others, HCC WILL NOT BE RESPONSIBLE FOR THE REMOVAL OF THESE AREAS)

Cold and/or Hot Weather protection

Protection, or any removal or replacement due to pedestrian control &/or vandalism. Protection of work outside of normal work hours to be by others.

Survey of any kind including but not necessarily limited to layout, horizontal, and vertical control.

Traffic and/or Pedestrian Control

Material Testing, 3rd party inspections, Inspection Scheduling, Cure Box; any & all testing of any kind

Electrical work of any kind including but not necessarily limited to support of electrical work

Utility Locates (GC's locate # shall be provided to HCC before mobilization to the job; HCC will not be responsible for damaged utilities)

Potholing utilities

shafts, shaft spoils handling and removal, and shaft construction joint cleaning/ roughening. Casing work.

Permits, Builders Risk, OCIP/Wrap up Insurance, Railroad Insurance, and/or Pollution Liability, Insurance outside HCC normal coverage as follows:

Com. Gen Liab - $1,000,000 per occurrence, $2,000,000 Agg
Auto Liab - $1,000,000 per accident
Workers Comp - $1,000,000
Pollution Liab - $2,000,000
Leased/rented equipment - $350,000
Umbrella Liab - $10,000,000

CHANGE ORDER #6
12/9/2021
Justification Attachment 1
Page 5 of 33

cleanup of biological and physical hazards not generated by us

DBE Participation

Mass Concrete

FOUGHT & COMPANY

Date: 8/9/21

Delivered Via: Email

Highmark Concrete Contractors

PO Box 1713 Buckley, WA 98321

Attention: Jason Warren

Subject: Fought & Co COR # 001R1 (Cost Breakdown Provided on Final Page)

Jason,

Below is the cost to incorporate Bottom Flange width at bearing detail (BR18) increased from 24" to 35", per RFI #004 response dated 04/21/21

RFI **#004 Response**	**$11,349.03**

Inclusions:

Exclusions:

Schedule Impact:

Sincerely,

Brad Oddo

Senior Project Manager

Fought & Co/REFA Erection

Direct: 503-718-3141 Ext 123

Mobile: 971-271-3985

Email: brad@foughtsteel.com

FOUGHT & COMPANY

Date:	8/9/2021
Project Number:	4340
Project Name:	Index Galena
COR No:	1

COR Description: Bottom flange width change at bearings (BR18). Added materials and splicing required.

CHANGE ORDER #6
12/9/2021
Justification Attachment 1
Page 7 of 33

Materials:	Plate	5925.00	Lbs	x	$1.43	/lb	=	$8,476.00	
	Angle	0.00	Lbs	x	$0.55	/lb	=	$0.00	
	Tube	0.00	Lbs	x	$0.55	/lb	=	$0.00	
	Wide Flange	0.00	Lbs	x	$0.55	/lb	=	$0.00	
	Bolts	0.00	Lot	x	$0.00	/lb	=	$0.00	
	Paint	0.00	Lot	x	$0.00	/lb	=	$0.00	
	Total Material Weight	5925	Lbs		(Not including bolts or paint)			Total Material:	$8,476.00
Drawings:	Detailing	0	Hrs	x	$75.00	/Hr	=	$0.00	
	Poduction Control	0	Hrs	x	$55.00	/Hr	=	$0.00	
	Project Expediter	0	Hrs	x	$55.00	/Hr	=	$0.00	
								Total Drawings:	$0.00
Labor:	Shop Labor (Add)	18	Hrs	x	$75.00	/Hr	=	$1,350.00	
	Shop Labor (Deduct)	0.00	Hrs	x	$75.00	/Hr	=	$0.00	
								Total Shop Labor:	$1,350.00
Shipping:	Loads	0	Ld	x	$0.00	/Ld	=	$0.00	
	Overwidth Loads	0	Ld	x	$0.00	/Ld	=	$0.00	
								Total Shipping:	$0.00
OH & P Fought Work	Overhead	$9,826.00		x	10%		=	$982.60	
	Profit	$10,808.60		x	5%		=	$540.43	
								Total OH & P:	$1,523.03
Subcontractors	Erection	0	Lot	x	$0.00	LS	=	$0.00	
	Decking	0	Lot	x	$0.00	LS	=	$0.00	
	Misc. Metals	0	Lot	x	$0.00	LS	=	$0.00	
	Subcontractor	0	Lot	x	$0.00	LS	=	$0.00	
								Total Subcontracts:	$0.00
Overhead & Profit on Subs	Overhead	$0.00		x	5%		=	$0.00	
	Profit	$0.00		x	5%		=	$0.00	
								Total OH & P on Subcontractors:	$0.00
Total COR Cost								Total all costs:	$11,349.03

HIGHMARK CONCRETE CONTRACTORS

REQUEST FOR INFORMATION

Highmark Concrete Contractors, LLC
2021-117 - Index-Galena Road Flood Repair

DATE: 4/07/2021
RFI#: 1

TO: Ron Jordan
Goodfellow Bros., Inc.
PO Box 1419
Maple Valley, WA 98038
PHONE: 509-662-7111
FAX: 509-662-2621
EMAIL: ronj@goodfellowbros.com
CC:

FROM: Jon Harris
Highmark Concrete Contractors, LLC
P.O. Box 1713
Buckley, WA 98321,
PHONE: 360-829-5189
FAX: 360-829-5473
EMAIL: JHarris@HighmarkCC.com

SUBJECT: Girder Flange Width

DRAWING #: BR14/BR18
SPEC SECTION:
REQUIRED RESPONSE DATE: 04/09/2021

QUESTION

On BR14, the pier 1 bearing detail shows the bottom girder flange as 35" wide and on BR18, it is shown as 24" wide. Please confirm the width of the bottom girder flange.

SUGGESTION:

RESPONSE GBI RFI 004

At the Pier 1 bearing, the bottom flange needs to be 35" wide to match the sole plate. After the bearing, the flange can taper back down to 24". See attached drawing revisions.

Jennifer Davis, WSP
4/13/21

If Goodfellow Bros Inc believes there is a cost impact as a result of this response, please provide notification and prepare a cost estimate with backup. Cost impact shall be negotiated and agreed upon by both parties ahead of the work.

Sam Chi

Digitally signed by S.Chi
DN: C=US, E=sam.chi@snoco.org, OU=Public Works - Engineering Services, O=Snohomish County, CN=S.Chi
Date: 2021.04.14 10:56:30-07'00'

ADDITIONAL INFORMATION:

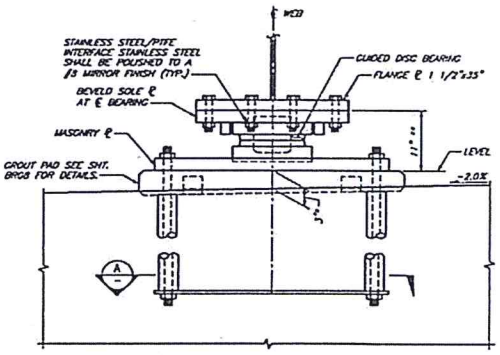

ELEVATION – PIER 1 BEARING

PIER REINFORCEMENT NOT SHOWN FOR CLARITY

* GROUT PAD ELEVATIONS ARE BASED ON ASSUMED DISC BEARING HEIGHT. ADJUST SHALL BE MADE TO GROUT PAD ELEVATION BASED ON FINAL DISC BEARING DESIGN UNDER DEAD LOAD.

** ASSUMED DISK BEARING HEIGHT

PIER	BRG. QTY.
1	3

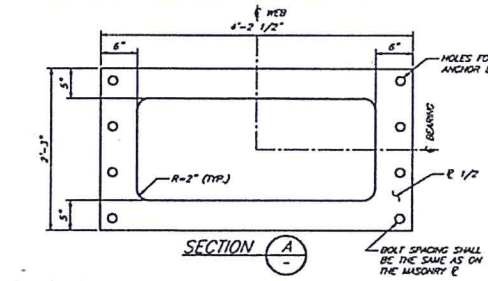

SECTION A

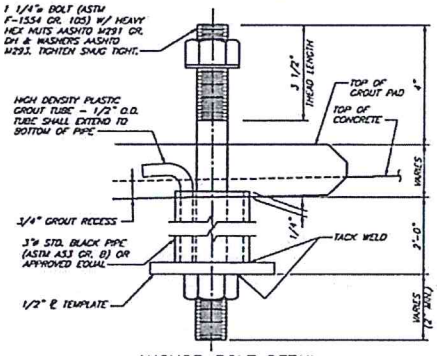

ANCHOR BOLT DETAIL

ANCHOR BOLTS SHALL BE HOT DIP GALVANIZED IN ACCORDANCE WITH AASHTO M232. ORDER ANCHOR BOLTS WITH SUPPLEMENTARY REQUIREMENTS S2, S3 AND S4.

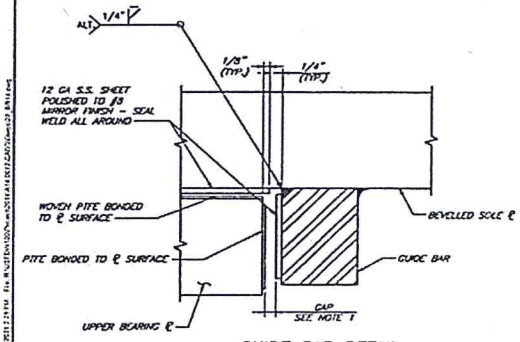

GUIDE BAR DETAIL

PIER 1 BEARING DESIGN LOADS TABLE

DIRECTION	LOAD CASE	LOAD
VERTICAL	DEAD LOAD (SERVICE)	225
VERTICAL	LIVE LOAD + IM (SERVICE)	390
LATERAL	DL + (LL + IMP) + W + TEMP (SERVICE)	30
MAX. VERTICAL	DEAD LOAD + LIVE LOAD + IM (STRENGTH)	690
LATERAL	DL + (LL + IMP) + W + TEMP (STRENGTH)	35
MAX. VERTICAL	DEAD LOAD + SEISMIC (MAX) (EXTREME)	415
MIN. VERTICAL	DEAD LOAD + SEISMIC (MIN) (EXTREME)	280
LATERAL TRANSV.	DEAD LOAD + SEISMIC (MAX) (EXTREME)	270
LATERAL LONGIT.	DEAD LOAD + SEISMIC (MAX) (EXTREME)	0

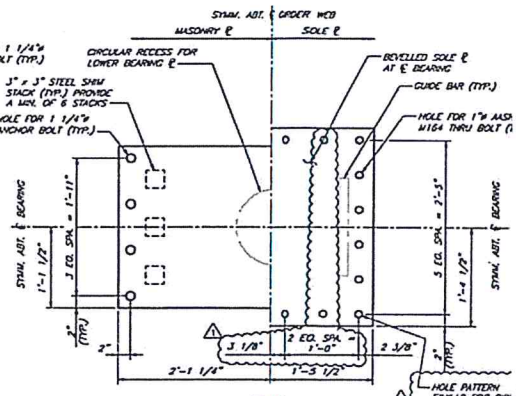

PLAN

NOTES:

1. BEARING DIMENSIONS ARE ASSUMED. BEARING ELEMENTS SHALL BE DESIGNED BY THE MANUFACTURER IN ACCORDANCE WITH THESE DETAILS AND THE SPECIAL PROVISIONS TO RESIST THE DESIGN SERVICE, STRENGTH AND EXTREME EVENT LOADS GIVEN IN THE "BEARING DESIGN LOADS TABLE". DESIGN SHALL ALSO ACCOMMODATE A MAXIMUM SERVICE LIMIT STATE ROTATION PLUS UNCERTAINTY ALLOWANCE TOTALING 0.03 RADIANS. SERVICE LONGITUDINAL DISPLACEMENT OF 5" ± 1/4, AND TRANSVERSE DISPLACEMENT OF 1/16". ADJUSTMENT SHALL BE MADE TO GROUT PAD ELEVATION BASED ON FINAL DISC BEARING SHOP DRAWINGS.
2. BEARING ELEMENTS SHALL BE DESIGNED USING AASHTO LRFD BRIDGE DESIGN SPECIFICATIONS FOR HIGHWAY BRIDGES, 4TH EDITION 2007 AND INTERIMS THROUGH 2009.
3. FINAL MINIMUM PLATE DIMENSIONS SHOWN. INCREASE THICKNESS AS REQUIRED FOR MACHINING TO FLATNESS TOLERANCE AFTER FABRICATION.
4. BOTTOM CIRCULAR LOWER BEARING PLATE AND MASONRY PLATE SHALL BE MACHINED TO PROVIDE A CLASS LC-6 FIT.
5. SOLE AND MASONRY PLATES SHALL BE AASHTO M270 GRADE 50 OR 50W STEEL UNLESS NOTED OTHERWISE.
6. BEARING COMPONENTS SHALL BE REMOVABLE AND REPLACEABLE.
7. SHOP DRAWINGS AND DESIGN CALCULATIONS SHALL BE SUBMITTED TO THE ENGINEER FOR APPROVAL PRIOR TO THE MANUFACTURE OF THE BEARINGS.
8. BEARINGS SHALL BE PAINTED. RECESSED PORTIONS OF ASSEMBLED BEARINGS SHALL ONLY RECEIVE ON COAT INORGANIC ZINC PRIMER.
9. PLATE SIZES AND BOLT PATTERNS FOR BEARING CONNECTIONS ARE BASED ON ASSUMED BEARING DIMENSIONS AND SHALL BE ADJUSTED IF NECESSARY TO ACCOMMODATE FINAL BEARING DESIGN. ANY CHANGES SHALL BE SUBMITTED TO THE ENGINEER FOR APPROVAL AND VERIFIED WITH THE BEARING AND STEEL FABRICATORS.
10. ALL BEARING SHALL BE MARKED PRIOR TO SHIPPING. THE MARKS SHALL INCLUDE THE BEARING LOCATION ON THE BRIDGE, AND A DIRECTION ARROW THAT POINTS UP-STATION. ALL MARKS SHALL BE PERMANENT AND BE VISIBLE AFTER THE BEARING IS INSTALLED. MARKS SHALL BE SHOWN ON SHOP DRAWINGS.

PLAN CHECK	BY	DATE
PRINTED	--	12/16/20

DATE	NO.	REVISION	BY
4/13/21	1	RFI 004	JO / SB

Last Saved by USER ATTIMES on Apr 13, 2021 2:28 PM

REGION	STATE	FED. AID PROJ. NO.	SURVEY NO.
10	WASH.	ER-0701(063)	4178

DESIGNED BY: DES | DRAWN BY: TRL | FIELD BOOK(S): | UPN: 06-0150

WSP USA Inc. 33133 9th Avenue South Suite 300 Federal Way, WA 98003-2600 TEL: (253) 931-3200 FAX: (206) 512-2250

4/13/2021

APPROVED FOR CONSTRUCTION

DOUGLAS W. McCORMICK, P.E. SNOHOMISH COUNTY ENGINEER

DATE APPROVED:

SNOHOMISH COUNTY DEPARTMENT OF PUBLIC WORKS

FUNDING NO. RC1532

INDEX-GALENA ROAD FLOOD REPAIR MP 6.4-6.9

BEARING DETAILS PIER 1

Copyright © WSP USA Inc. All Rights Reserved

Copyright © WSP USA Inc. All Rights Reserved

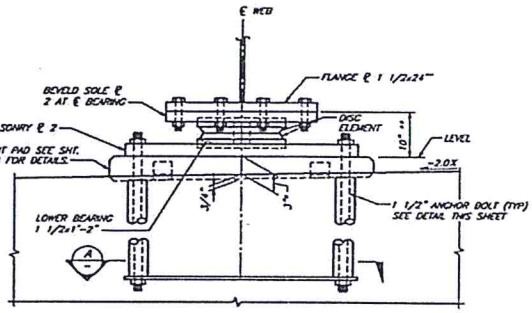

ELEVATION – PIER 2 BEARING

PIER REINFORCEMENT NOT SHOWN FOR CLARITY

* GROUT PAD ELEVATIONS ARE BASED ON ASSUMED DISC BEARING HEIGHT. ADJUST SHALL BE MADE TO GROUT PAD ELEVATION BASED ON FINAL DISC BEARING DESIGN UNDER DEAD LOAD.

** ASSUMED DISK BEARING HEIGHT

PIER	BRG. QTY.
2	3

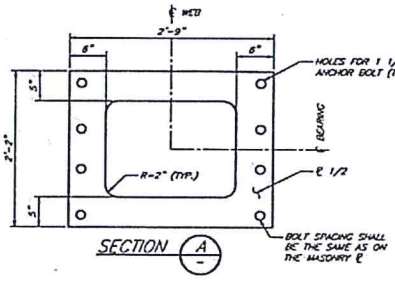

SECTION A

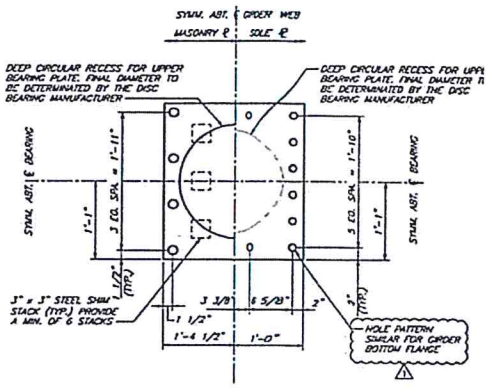

PLAN

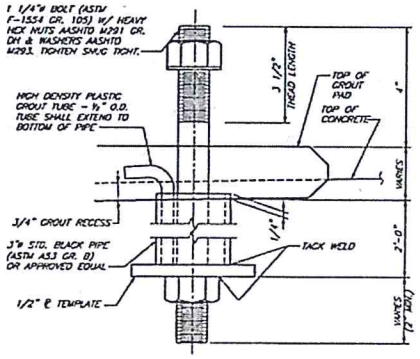

ANCHOR BOLT DETAIL

ANCHOR BOLTS SHALL BE HOT DIP GALVANIZED IN ACCORDANCE WITH AASHTO M232. ORDER ANCHOR BOLTS WITH SUPPLEMENTARY REQUIREMENTS S2, S3 AND S4.

PIER 2 BEARING DESIGN LOADS TABLE

DIRECTION	LOAD CASE	LOAD
VERTICAL	DEAD LOAD (SERVICE)	225
VERTICAL	LIVE LOAD + IM (SERVICE)	390
LATERAL	DL + (LL + IM) + W + TEMP (SERVICE)	30
MAX. VERTICAL	DEAD LOAD + LIVE LOAD + IM (STRENGTH)	690
LATERAL	DL + (LL + IM) + W + TEMP (STRENGTH)	35
MAX. VERTICAL	DEAD LOAD + SEISMIC (MAX) (EXTREME)	415
MIN. VERTICAL	DEAD LOAD + SEISMIC (MIN) (EXTREME)	280
LATERAL TRANSV.	DEAD LOAD + SEISMIC (MAX) (EXTREME)	270
LATERAL LONGIT.	DEAD LOAD + SEISMIC (MAX) (EXTREME)	190

NOTES:

1. BEARING DIMENSIONS ARE ASSUMED. BEARING ELEMENTS SHALL BE DESIGNED BY THE MANUFACTURER IN ACCORDANCE WITH THESE DETAILS AND THE SPECIAL PROVISIONS TO RESIST THE DESIGN SERVICE, STRENGTH AND EXTREME EVENT LOADS GIVEN IN THE "BEARING DESIGN LOADS TABLE". DESIGN SHALL ALSO ACCOMMODATE A MAXIMUM SERVICE LIMIT STATE ROTATION PLUS UNCERTAINTY ALLOWANCE TOTALING 0.03 RADIANS. ADJUSTMENT SHALL BE MADE TO GROUT PAD ELEVATION BASED ON FINAL DISC BEARING SHOP DRAWINGS.
2. BEARING ELEMENTS SHALL BE DESIGNED USING AASHTO LRFD BRIDGE DESIGN SPECIFICATIONS FOR HIGHWAY BRIDGES, 4TH EDITION 2007 AND INTERIMS THROUGH 2009.
3. FINAL MINIMUM PLATE DIMENSIONS SHOWN. INCREASE THICKNESS AS REQUIRED FOR MACHINING TO FLATNESS TOLERANCE AFTER FABRICATION.
4. BOTTOM CIRCULAR LOWER BEARING PLATE AND MASONRY PLATE SHALL BE MACHINED TO PROVIDE A CLASS LC-6 FIT.
5. SOLE AND MASONRY PLATES SHALL BE AASHTO M270 GRADE 50 OR 50W STEEL UNLESS NOTED OTHERWISE.
6. BEARING COMPONENTS SHALL BE REMOVABLE AND REPLACEABLE.
7. SHOP DRAWINGS AND DESIGN CALCULATIONS SHALL BE SUBMITTED TO THE ENGINEER FOR APPROVAL PRIOR TO THE MANUFACTURE OF THE BEARINGS.
8. BEARINGS SHALL BE PAINTED. RECESSED PORTIONS OF ASSEMBLED BEARINGS SHALL ONLY RECEIVE ONE COAT INORGANIC ZINC PRIMER.
9. PLATE SIZES AND BOLT PATTERNS FOR BEARING CONNECTIONS ARE BASED ON ASSUMED BEARING DIMENSIONS AND SHALL BE ADJUSTED IF NECESSARY TO ACCOMMODATE FINAL BEARING DESIGN. ANY CHANGES SHALL BE SUBMITTED TO THE ENGINEER FOR APPROVAL AND VERIFIED WITH THE BEARING AND STEEL FABRICATORS.
10. ALL BEARING SHALL BE MARKED PRIOR TO SHIPPING. THE MARKS SHALL INCLUDE THE BEARING LOCATION ON THE BRIDGE, AND A DIRECTION ARROW THAT POINTS UP-STATION. ALL MARKS SHALL BE PERMANENT AND BE VISIBLE AFTER THE BEARING IS INSTALLED. MARKS SHALL BE SHOWN ON SHOP DRAWINGS.

PLAN CHECK	BY	DATE
PRINTED	--	12/18/20

DATE	NO	REVISION	BY
4/13/21	1	RFI 004	JD

REGION	STATE	FED. AID PROJ. NO.	SURVEY NO.
10	WASH.	ER-0701(063)	4178

DESIGNED BY: DES | DRAWN BY: TRL
FIELD BOOK(S): | UPN 05-0150

WSP USA Inc.
11321 9th Avenue South
Suite 200
Federal Way, WA 98003-2609
TEL: (206) 431-2200
FAX: (206) 431-2230

APPROVED FOR CONSTRUCTION
DOUGLAS W. McCORMICK, P.E.
SNOHOMISH COUNTY ENGINEER
DATE APPROVED:

SNOHOMISH COUNTY DEPARTMENT OF PUBLIC WORKS
FUNDING NO. RC1537

INDEX–GALENA ROAD
FLOOD REPAIR MP 6.4–6.9
BEARING DETAILS
PIER 2

REVISED BR
SHEET 17 OF 22 SHTS

Copyright © WSP USA Inc. All Rights Reserved

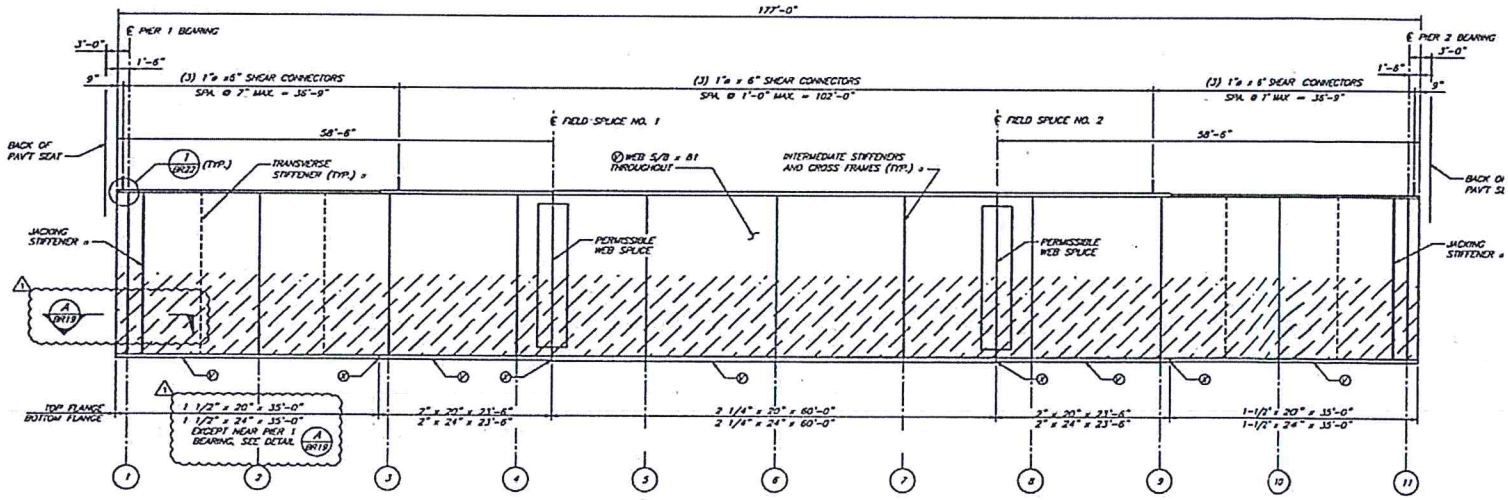

GIRDER ELEVATION

GIRDER B SHOWN, GIRDERS A & C SIMILAR

- ⓪ DENOTES MAIN LOAD CARRYING MEMBER COMPONENTS SUBJECT TO TENSILE STRESS.
- ⓪ DENOTES TENSION BUTT WELD FOR FLANGES OR WEBS.
- a TRANSVERSE STIFFENER (TYP.) FOR LOCATIONS SEE SHT. BR17 AND FOR MISC DETAILS SEE SHT. BR19.
- STEEL GIRDER TENSION REGIONS (USE FOR INSPECTION AND REPAIRS)

PLAN CHECK	BY	DATE
PRINTED	--	12/16/20

DATE	NO.	REVISION	BY
4/13/21	RFI 004		JD SB

REGION NO.	STATE	FED. AID PROJ. NO.	SURVEY NO.
10	WASH.	ER-0701(063)	4178

DESIGNED BY: DES
DRAWN BY: TRL
FIELD BOOK(S):
UPN: 05-0150

WSP USA Inc.

APPROVED FOR CONSTRUCTION
DOUGLAS W. McCORMACK, P.E.
SNOHOMISH COUNTY ENGINEER
DATE APPROVED:

SNOHOMISH COUNTY DEPARTMENT OF PUBLIC WORKS
FUNDING NO. RC1532

INDEX—GALENA ROAD
FLOOD REPAIR MP 6.4–6.9

GIRDER ELEVATION

REFER SHEET BR

SHE 17 OF 22 941

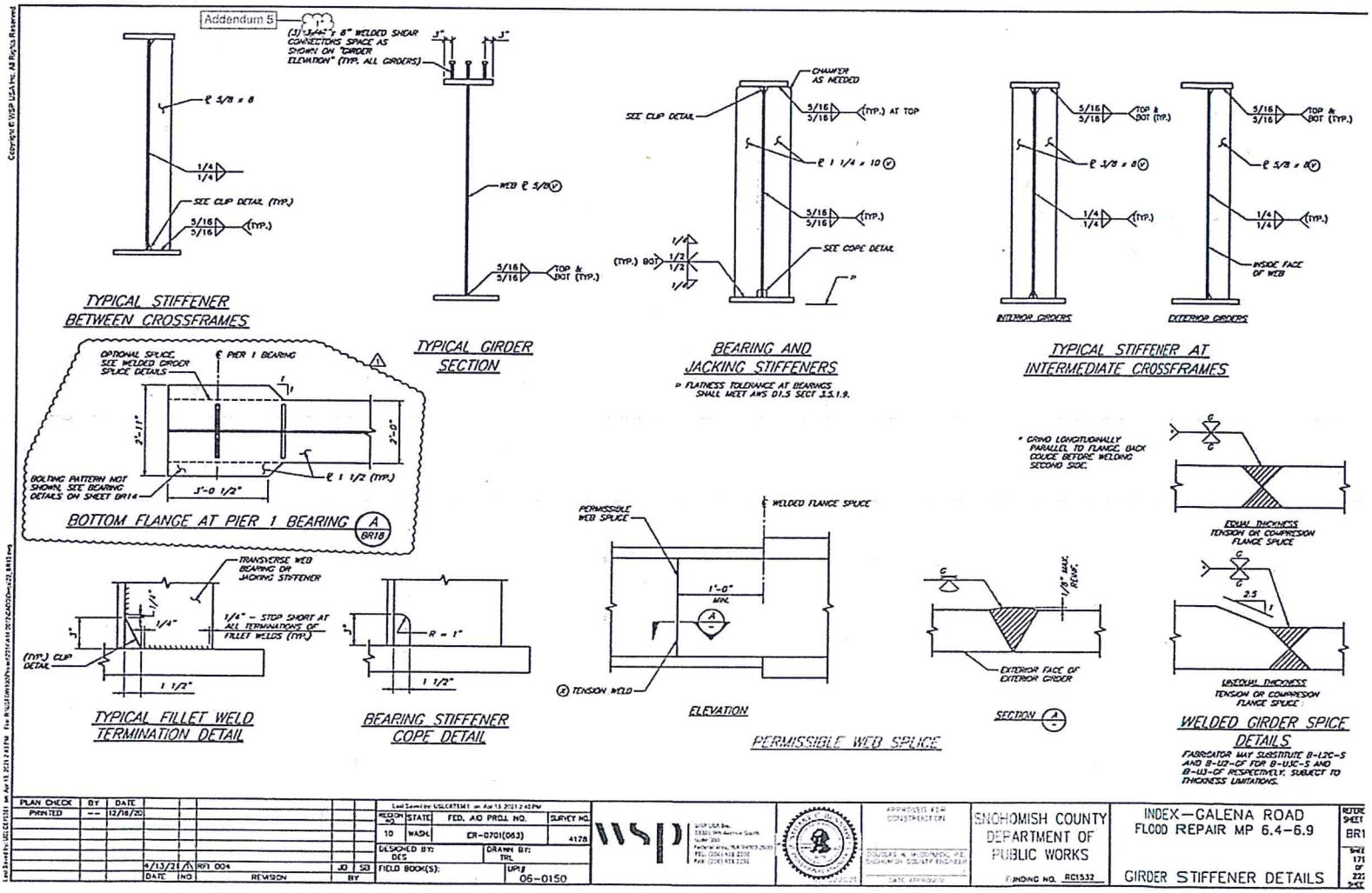
Addendum 5
(3) 3/4" ø 6" WELDED SHEAR CONNECTORS SPACE AS SHOWN ON "GIRDER ELEVATION" (TYP. ALL GIRDERS)
SEE CLIP DETAIL (TYP.)
TYPICAL STIFFENER BETWEEN CROSSFRAMES
WEB ℄ 3/8
TOP & BOT (TYP.)
TYPICAL GIRDER SECTION
CHAMFER AS NEEDED
SEE CLIP DETAIL
(TYP.) AT TOP
SEE COPE DETAIL
BEARING AND JACKING STIFFENERS
▷ FLATNESS TOLERANCE AT BEARINGS SHALL MEET AWS D1.5 SECT 3.5.1.9.
INTERIOR GIRDERS
EXTERIOR GIRDERS
INSIDE FACE OF WEB
TYPICAL STIFFENER AT INTERMEDIATE CROSSFRAMES
OPTIONAL SPLICE, SEE WELDED GIRDER SPLICE DETAILS
℄ PIER 1 BEARING
BOLTING PATTERN NOT SHOWN, SEE BEARING DETAILS ON SHEET BR14
BOTTOM FLANGE AT PIER 1 BEARING
TRANSVERSE WEB BEARING OR JACKING STIFFENER
1/4" – STOP SHORT AT ALL TERMINATIONS OF FILLET WELDS (TYP.)
(TYP.) CLIP DETAIL
TYPICAL FILLET WELD TERMINATION DETAIL
R = 1"
BEARING STIFFENER COPE DETAIL
PERMISSIBLE WEB SPLICE
℄ WELDED FLANGE SPLICE
TENSION WELD
ELEVATION
EXTERIOR FACE OF EXTERIOR GIRDER
SECTION
PERMISSIBLE WEB SPLICE
* GRIND LONGITUDINALLY PARALLEL TO FLANGE, BACK GOUGE BEFORE WELDING SECOND SIDE.
EQUAL THICKNESS TENSION OR COMPRESSION FLANGE SPLICE
UNEQUAL THICKNESS TENSION OR COMPRESSION FLANGE SPLICE
WELDED GIRDER SPICE DETAILS
FABRICATOR MAY SUBSTITUTE B-L2C-S AND B-U2-GF FOR B-U3C-S AND B-U3-GF RESPECTIVELY, SUBJECT TO THICKNESS LIMITATIONS.
PLAN CHECK
PRINTED
12/16/20
4/13/21
RFI 004
REVISION
FED. AID PROJ. NO.
ER-0701(063)
SURVEY NO.
4178
DESIGNED BY: DES
DRAWN BY: TRL
FIELD BOOK(S):
UP# 06-0150
SNOHOMISH COUNTY DEPARTMENT OF PUBLIC WORKS
FUNDING NO. RC1532
INDEX—GALENA ROAD FLOOD REPAIR MP 6.4–6.9
GIRDER STIFFENER DETAILS

Brad Oddo

From: Jon Harris <JHarris@highmarkcc.com>
Sent: Wednesday, April 21, 2021 1:24 PM
To: Brad Oddo
Cc: Jason Warren
Subject: RE: 4340 - Index Galena Bridge - Schedule Confirmation

I don't know but I will ask.

Please send your cost impact as soon as you can so I can process it. Do you have a ROM cost impact – just so I know how much this issue may be?

From: Brad Oddo [mailto:brad@foughtsteel.com]
Sent: Wednesday, April 21, 2021 1:21 PM
To: Jon Harris <JHarris@highmarkcc.com>
Cc: Jason Warren <JWarren@highmarkcc.com>
Subject: RE: 4340 - Index Galena Bridge - Schedule Confirmation

Good Afternoon Jon –

This will have a cost impact for us, as we based our material pricing based on BR18 typical details with bearings being excluded. I will forward paperwork as soon as we get the impact verified.

The info on what plant the materials will be know in June, when next steel rollings occur. I will let you know as soon as I find out.

Do you know who the shop inspection company for this project will be?

Thanks –

Brad Oddo
Senior Project Manager
Fought & Co/REFA Erection
Direct: 503-718-3141 Ext 123
Mobile: 971-271-3985
Email: brad@foughtsteel.com

FOUGHT & COMPANY

REFA STEEL ERECTORS

CHANGE ORDER #6
12/9/2021
Justification Attachment 1
Page 14 of 33

From: Jon Harris <JHarris@highmarkcc.com>
Sent: Wednesday, April 21, 2021 1:08 PM
To: Brad Oddo <brad@foughtsteel.com>
Cc: Jason Warren <JWarren@highmarkcc.com>
Subject: RE: 4340 - Index Galena Bridge - Schedule Confirmation

Hi Brad,

See the attached RFI responses.

Also what plant will the girders come from? I need to let the Owner know for the fabrication inspections.

Thanks,

Jon

From: Brad Oddo [mailto:brad@foughtsteel.com]
Sent: Wednesday, April 14, 2021 11:06 AM
To: Jon Harris <JHarris@highmarkcc.com>; Jason Warren <JWarren@highmarkcc.com>
Cc: Rachel T <RThomas@highmarkcc.com>; steelconinc@comcast.net; Samuel Robinson <SamuelR@foughtsteel.com>; Jeremy Stam <Jeremy.Stam@foughtsteel.com>; Patty Chitwood <pattyc@foughtsteel.com>; Kevin Fahey <kevinf@foughtsteel.com>
Subject: RE: 4340 - Index Galena Bridge - Schedule Confirmation

Good Morning Jon –

Thanks for taking my call Monday morning to discuss the project. When we spoke I mentioned that our PO shows delivery date of "10/1/2021 (to be delivered to the project as season/weather allows as late as June 2022)".

I know it's a little way out there, but have you had an opportunity to put together an expected delivery date? We want to make sure we have this properly scheduled in the shop to ensure delivery.

Also, we've sent in our advance bill of materials to the steel mills hoping to get in for a June 2021 rolling. Our purchase could be affected depending on the response to RFI below.

Thanks –

Brad Oddo
Senior Project Manager
Fought & Co/REFA Erection
Direct: 503-718-3141 Ext 123
Mobile: 971-271-3985
Email: brad@foughtsteel.com

FOUGHT & COMPANY

REFA STEEL ERECTORS

From: Brad Oddo
Sent: Tuesday, April 6, 2021 3:21 PM
To: Jon Harris <JHarris@highmarkcc.com>; Jason Warren <JWarren@highmarkcc.com>
Cc: Rachel T <RThomas@highmarkcc.com>; steelconinc@comcast.net; Samuel Robinson <SamuelR@foughtsteel.com>; Jeremy Stam <Jeremy.Stam@foughtsteel.com>
Subject: 4340 - Index Galena Bridge - Fought RFI 001

Good Afternoon Jason –

Thanks for taking my call.

Please see below and attached.

Fought RFI 001:

Design drawing BR14 Elevation – Pier 1 Bearing detail shows bottom flange as 35" wide.

Design drawing BR18 shows bottom flange as 24" wide.

Fought's takeoff and pricing is based on 24" wide bottom flange. Please confirm this is correct.

Please feel free to contact me direct with any questions.

Thanks –

Brad Oddo
Senior Project Manager
Fought & Co/REFA Erection
Direct: 503-718-3141 Ext 123
Mobile: 971-271-3985
Email: brad@foughtsteel.com

FOUGHT & COMPANY

REFA STEEL ERECTORS

Brad Oddo

CHANGE ORDER #6
12/9/2021
Justification Attachment 1
Page 16 of 33

From: Patty Chitwood
Sent: Thursday, April 22, 2021 3:40 PM
To: Brad Oddo
Cc: Jeremy Stam
Subject: RE: 4340 Index Galena Road Material Change

Follow Up Flag: Follow up
Flag Status: Flagged

Brad,

The plate additional cost for this revision is $8,476.00. Plus this will change Kevin's pre-splicing.

Thanks,

Patty Chitwood
Purchasing Manager
(503) 639-3141
Direct Line: (503) 718-3104
Email: pattyc@foughtsteel.com
FOUGHT & COMPANY

From: Brad Oddo <brad@foughtsteel.com>
Sent: Thursday, April 22, 2021 9:53 AM
To: Patty Chitwood <pattyc@foughtsteel.com>
Cc: Jeremy Stam <Jeremy.Stam@foughtsteel.com>
Subject: FW: 4340 Index Galena Road Material Change

Patty –

Please see attached revision to advance bill.

Please let me know what the cost impact will be as soon as you can so that I can provide cost to the contractor.

Thanks –

Brad Oddo
Senior Project Manager
Fought & Co/REFA Erection
Direct: 503-718-3141 Ext 123
Mobile: 971-271-3985
Email: brad@foughtsteel.com

FOUGHT & COMPANY

REFA STEEL ERECTORS

CHANGE ORDER #6
12/9/2021
Justification Attachment 1
Page 17 of 33

From: steelconinc@comcast.net <steelconinc@comcast.net>
Sent: Thursday, April 22, 2021 9:22 AM
To: Brad Oddo <brad@foughtsteel.com>
Subject: 4340 Index Galena Road Material Change

Advance bill page 1 revision 1 is attached with line 13 bottom flange plate widened to 35" per RFI answer received yesterday.

Bryan Hulen
Steelcon, Inc.

CUSTOMER

STRUCTURE: INDEX – GALENA ROAD

MATERIAL SPEC: ASTM A709 GR 50

OTHER: CVN=15FT–LBS @ 40°F

FOUGHT & COMPANY, INC.
ADVANCE BILL

CHANGE ORDER #6
12/9/2021
Justification Attachment 1
Page 18 of 33

JOB NO. 4340

PAGE 1 OF ___

DATE 3/10/21

PREP BY: FLJ

ALL MATERIAL ORDERED EXACT – NO TRIM ADDED

ENGINEERING DEPT.

KEY	ITEM	QTY	DESCRIPTION	LENGTH FT	LENGTH IN	TOT LENGTH FT	TOT LENGTH IN	UNIT WT	WT	MATERIAL USE	FIN ALLOW
	1	6	PL $\frac{5}{8}$x82 (CVN)	59	0					WEB 1" CAM.	
	2										
	3	3	PL $\frac{5}{8}$x83 (CVN)	60	1					WEB 1 3/4" CAM.	
	4										
	5	3	PL $1\frac{1}{2}$x20	35	4					TOP FLANGE *	
	6										
	7	3	PL $1\frac{1}{2}$x20	35	2					TOP FLANGE *	
	8										
	9	6	PL 2x20	23	8					TOP FLANGE *	
	10										
	11	3	PL $2\frac{1}{4}$x20	60	1					TOP FLANGE *	
	12										
	13	3	PL $1\frac{1}{2}$x35 (CVN)	35	2					BOTTOM FLANGE *	
	14										
	15	*	FLANGE PLATES SHALL BE PURCHASED SUCH THAT THE RATIO OF REDUCTION OF THK. FROM SLAB TO PLATE ≥ 3.0:1								

PURCHASING DEPT.

QTY	DESCRIPTION	LENGTH FT	LENGTH IN	VENDOR P.O.	MILL MK

only for 11", not the whole plate

1.5 x 11 x 422 x .2836 = 5924.12

MK	REVISION	BY	DATE
1	CHG WIDTH FROM 24" TO 35" LINE 13	BKH	4/22/21

MK	REVISION	BY	DATE

MK	REVISION	BY	DATE

Index-Galena COR 2 Girder Splice Plate Adjustments

CHANGE ORDER #6
12/9/2021
Justification Attachment 2
Page 19 of 33

Highmark Concrete Contractors, LLC

P.O. Box 1713
Buckley, WA 98321
Contact: **Dan Sharpe**
Phone: **(206) 900-3237**
Fax: **360-829-5473**

Quote To: Goodfellow Brothers
Phone:
Fax:

Job Name: Index-Galena COR 2 Girder Splice Plate
Revision 1

HCC Acknowledges No Addendum

ITEM	DESCRIPTION	QUANTITY	UNIT	UNIT PRICE	AMOUNT
COR 2	Girder Splice Design Change	1.00	LS	25,500.00	25,500.00

GRAND TOTAL **$25,500.00**

NOTES:

INCLUSIONS:

Listed items only

Union Labor

Safety items required to do the work

Girder Splice Change per Plan Revision 5.

Retension Bond, Zone Pay

Standard Markup Instructions

	Cost Basis	Markup %	Markup
Labor	2,114	29.00	613
Burden	1,454	29.00	422
Perm Matl	15,422	21.00	3,239
Const Matl	218	21.00	46
Sub	0	12.00	0
Eq Op. Exps	422	21.00	89
Co Equip	955	21.00	201
Rented Eqp	0	21.00	0
Trucking	0	29.00	0
Civil	0	12.00	0
Misc3	0	0.00	0
Overrides	0	0.00	0
Use Avg: ☐	20,585	22.39	4,608

CLARIFICATIONS/ASSUMPTIONS:

Conditions of Subcontract Apply

Owner/General to supply access to work zone adequate for HCC equipment/crew to complete quoted items.

All soils assumed clean (non-contaminated)

Suitable existing subgrade material to build on

Work completed 2022

Continuous, Sequential work for all items

Mutually agreed upon schedule

Totals as of Last Spread

	Cost	Markup	Total
Direct	20,367	4,563	24,930
Indirect	218	46	264
Addons	135	0	135
Bond	0		0
SubTotal	20,720	4,609	25,329
Pass Through	0		0
Total	20,720	4,609	25,329

Assumed all overhead/underground power lines, utilities, and/or obstructions will be removed and/or protected from work area at no cost to HCC

Price good for 30-days.

The terms of this proposal will be included in any subcontract agreement or Addendum

Pricing (Tax) based on WSDOT Standard Specification 1-07.2(1), WAC 458-20-171.

EXCLUSIONS

Any Temporary Erosion Sediment Control (TESC) measures

Demolition and removal of any kind including Mockups and/or test slabs

Temp facilities - Restrooms, Garbage Dumpster's, Lighting (to be provided by GC)

Overtime, night, and weekend work, and associated costs like night plant premiums

Sand Blasting, Paint, Pigmented Sealer, anti-graffiti, exposed aggregate finishes

Supply of embedded materials (i.e. anchor bolts, conduit, handrail, etc.)

Drainage, or water management

Dewatering, including but necessarily limited to Surface Water Monitoring & Testing

All Grading, base course, subgrade & materials

Concrete spoils due to deep grade or patches out by prime

Fencing/railing - (temporary and/or permanent)

Welding

Ready Mix &/or Concrete Pump Truck Washout Areas (To be provided by others, HCC WILL NOT BE RESPONSIBLE FOR THE REMOVAL OF THESE AREAS)

Cold and/or Hot Weather protection

Protection, or any removal or replacement due to pedestrian control &/or vandalism. Protection of work outside of normal work hours to be by others.

Survey of any kind including but not necessarily limited to layout, horizontal, and vertical control.

Traffic and/or Pedestrian Control

Material Testing, 3rd party inspections, Inspection Scheduling, Cure Box; any & all testing of any kind

Electrical work of any kind including but not necessarily limited to support of electrical work

Utility Locates (GC's locate # shall be provided to HCC before mobilization to the job; HCC will not be responsible for damaged utilities)

Potholing utilities

shafts, shaft spoils handling and removal, and shaft construction joint cleaning/ roughening. Casing work.

Permits, Builders Risk, OCIP/Wrap up Insurance, Railroad Insurance, and/or Pollution Liability, Insurance outside HCC normal coverage as follows:

Com. Gen Liab - $1,000,000 per occurrence, $2,000,000 Agg
Auto Liab - $1,000,000 per accident
Workers Comp - $1,000,000
Pollution Liab - $2,000,000
Leased/rented equipment - $350,000
Umbrella Liab - $10,000,000

cleanup of biological and physical hazards not generated by us

DBE Participation

Mass Concrete

FOUGHT & COMPANY

Date: 8/9/21

Delivered Via: Email

Highmark Concrete Contractors

PO Box 1713 Buckley, WA 98321

Attention: Jason Warren

Subject: Fought & Co COR # 002R1 (Material Weight Corrected)

Jason,

Below is the cost to incorporate splice plate changes (BR20, BR21 Plan Rev 5) dated 7/30/21.

BR20, BR21 Plan Rev 5	**$14,148.75**

Inclusions:

Exclusions:

Schedule Impact:

Sincerely,

Brad Oddo

Senior Project Manager

Fought & Co/REFA Erection

Direct: 503-718-3141 Ext 123

Mobile: 971-271-3985

Email: brad@foughtsteel.com

FOUGHT & COMPANY

Date:	10/27/2021
Project Number:	4340
Project Name:	Index Galena
COR No:	2R1

COR Description: Field splice PL change (BR20, BR21 Plave Rev 5) received 7/28/21

CHANGE ORDER #6
12/9/2021
Justification Attachment 2
Page 23 of 33

Materials:	Plate	9441.33	Lbs	x	$1.27	/lb	=	$12,025.00	
	Angle	0.00	Lbs	x	$0.55	/lb	=	$0.00	
	Tube	0.00	Lbs	x	$0.55	/lb	=	$0.00	
	Wide Flange	0.00	Lbs	x	$0.55	/lb	=	$0.00	
	Bolts	0.00	Lot	x	$0.00	/lb	=	$0.00	
	Paint	0.00	Lot	x	$0.00	/lb	=	$0.00	
	Total Material Weight	**9441.33**	Lbs		(Not including bolts or paint)			Total Material:	$12,025.00
Drawings:	Detailing	0	Hrs	x	$75.00	/Hr	=	$0.00	
	Poduction Control	0	Hrs	x	$55.00	/Hr	=	$0.00	
	Project Expediter	0	Hrs	x	$55.00	/Hr	=	$0.00	
								Total Drawings:	$0.00
Labor:	Shop Labor (Add)	3	Hrs	x	$75.00	/Hr	=	$225.00	
	Shop Labor (Deduct)	0.00	Hrs	x	$75.00	/Hr	=	$0.00	
								Total Shop Labor:	$225.00
Shipping:	Loads	0	Ld	x	$0.00	/Ld	=	$0.00	
	Overwidth Loads	0	Ld	x	$0.00	/Ld	=	$0.00	
								Total Shipping:	$0.00
OH & P Fought Work	Overhead	$12,250.00		x	10%		=	$1,225.00	
	Profit	$13,475.00		x	5%		=	$673.75	
								Total OH & P:	$1,898.75
Subcontractors	Erection	0	Lot	x	$0.00	LS	=	$0.00	
	Decking	0	Lot	x	$0.00	LS	=	$0.00	
	Misc. Metals	0	Lot	x	$0.00	LS	=	$0.00	
	Subcontractor	0	Lot	x	$0.00	LS	=	$0.00	
								Total Subcontracts:	$0.00
Overhead & Profit on Subs	Overhead	$0.00		x	5%		=	$0.00	
	Profit	$0.00		x	5%		=	$0.00	
								Total OH & P on Subcontractors:	$0.00
Total COR Cost								**Total all costs:**	**$14,148.75**

CUSTOMER

STRUCTURE: INDEX – GALENA ROAD

MATERIAL SPEC: ASTM A709 GR 50

OTHER: CVN=15FT-LBS @ 40°F U.N.

FOUGHT & COMPANY, INC.
ADVANCE BILL

ALL MATERIAL ORDERED EXACT – NO TRIM ADDED

JOB NO. 4340

PAGE 2 OF

DATE 3/10/21

PREP BY: FLJ

ENGINEERING DEPT.

REV	ITEM	QTY	DESCRIPTION	LENGTH FT	LENGTH IN	TOT LENGTH FT	TOT LENGTH IN	UNIT WT	WT	MATERIAL USE	FIN ALLOW
	1	3	PL 1½x24 (CVN)	35	2					BOTTOM FLANGE *	
	2										
	3	6	PL 2x24 (CVN)	23	7					BOTTOM FLANGE *	
	4										
	5	3	PL 2¼x24 (CVN)	60	1					BOTTOM FLANGE *20FT-LBS @ 40°F	
	6										
1	7	6	PL 1¼x20 (CVN)	3	10					SPLICE PLATE TOP FLANGE	
	8										
1	9	12	PL 1¼x9 (CVN)	3	10					SPLICE PLATE TOP FLANGE	
	10										
1	11	24	PL 1¼x11 (CVN)	4	7					SPLICE PLATE BOTTOM FLANGE	
	12										
1	13	6	PL ¼x20	2	3½					SPLICE PLATE TOP FILL	
	14										
	15	*	FLANGE PLATES SHALL BE PURCHASED SUCH THAT THE RATIO OF REDUCTION OF THK. FROM SLAB TO PLATE ≥ 3.0:1								

PURCHASING DEPT.

QTY	DESCRIPTION	LENGTH FT	LENGTH IN	VENDOR P.O.	MILL MK
	1956.84				
	1761.16				
	5147.34				
	233.97				

MK	REVISION	BY	DATE
1	CHG THK, LEN LN 7,9,11 CHG LEN LN 13	BKH	7/28/21

MK	REVISION	BY	DATE

MK	REVISION	BY	DATE

CHANGE ORDER #6
12/9/2021
Justification Attachment 2
Page 24 of 33

CUSTOMER

STRUCTURE: INDEX – GALENA ROAD

MATERIAL SPEC: ASTM A709 GR 50

OTHER: CVN=15FT-LBS @ 40°F

FOUGHT & COMPANY, INC.
ADVANCE BILL

ALL MATERIAL ORDERED EXACT – NO TRIM ADDED

JOB NO. 4340

PAGE 3 OF

DATE 3/10/21

PREP BY: FLJ

ENGINEERING DEPT.

REV	ITEM	QTY	DESCRIPTION	LENGTH FT	LENGTH IN	TOT LENGTH FT	TOT LENGTH IN	UNIT WT	WT	MATERIAL USE	FIN ALLOW
2	1	6	PL $\frac{1}{4}$x24	2	$9\frac{1}{2}$					SPLICE PLATE BOTTOM FILL	
	2										
	3	12	PL $\frac{5}{8}$x72 (CVN)	2	7					SPLICE PLATE WEB	
	4										
	5	24	L5x$3\frac{1}{2}$x$\frac{3}{8}$	0	4					HANDRAIL CLIPS	
	6										
	7	24	PL $1\frac{1}{4}$x10 (CVN)	6	10					STIFFENER B.1E. BRG. & JACKING	
	8										
	9	18	PL $\frac{5}{8}$x8 (CVN)	6	9					STIFFENER EXT. CF	
	10										
1	11	18	PL $\frac{3}{8}$x8 (CVN)	6	9					STIFFENER INT. CF	
	12										
	13	16	PL $\frac{5}{8}$x8	6	9					STIFFENER WEB	
	14										
	15										

PURCHASING DEPT.

QTY	DESCRIPTION	LENGTH FT	LENGTH IN	VENDOR P.O.	MILL MK
	342.02				
	9441.33				

MK	REVISION	BY	DATE	MK	REVISION	BY	DATE	MK	REVISION	BY	DATE
1	CHG THK LINE 11	BKH	5/12/21	2	CHG LENTH LINE 1	BKH	7/28/21				

CHANGE ORDER #6
12/9/2021
Justification Attachment 2
Page 25 of 33

Brad Oddo

From: Patty Chitwood
Sent: Tuesday, August 3, 2021 9:50 AM
To: Brad Oddo
Cc: Jeremy Stam
Subject: RE: 4340 Index - Galena Rd.

Brad,

The 7/8" plate has rolled and is in testing. We cannot cancel it unless it fails again.

The 1 ¼" plate I have ordered thru a local warehouse and using a small stock plate. Total cost $12,025.00

Hope that helps.

Patty Chitwood
Purchasing Manager
(503) 639-3141
Direct Line: (503) 718-3104
Email: pattyc@foughtsteel.com
FOUGHT & COMPANY

From: Brad Oddo <brad@foughtsteel.com>
Sent: Monday, August 02, 2021 10:43 AM
To: Patty Chitwood <pattyc@foughtsteel.com>
Cc: Jeremy Stam <Jeremy.Stam@foughtsteel.com>
Subject: FW: 4340 Index - Galena Rd.

Patty –

Please let me know what the cost impact for these material changes is as soon as you can.

Thanks –

Brad Oddo
Senior Project Manager
Fought & Co/REFA Erection
Direct: 503-718-3141 Ext 123
Mobile: 971-271-3985
Email: brad@foughtsteel.com

FOUGHT & COMPANY

REFA STEEL ERECTORS

From: steelconinc@comcast.net <steelconinc@comcast.net>
Sent: Wednesday, July 28, 2021 4:18 PM
To: Brad Oddo <brad@foughtsteel.com>
Cc: Pamela McGowan <PamelaM@foughtsteel.com>; Patty Chitwood <pattyc@foughtsteel.com>; Jeremy Stam <Jeremy.Stam@foughtsteel.com>
Subject: 4340 Index - Galena Rd.

Brad,

Advance bill sheets 2(rev. 1) and 3(rev. 2) are attached with field splice material updated per the revised designs.

Bryan Hulen
Steelcon, Inc.

CHANGE ORDER #6
12/9/2021
Justification Attachment 2
Page 27 of 33

Brad Oddo

From: steelconinc@comcast.net
Sent: Wednesday, July 28, 2021 12:05 PM
To: Brad Oddo
Cc: Pamela McGowan; Jeremy Stam; Patty Chitwood
Subject: RE: 4340 - RE: Index-Galena Rd. - Girder design changes

Brad,

We will get a revised ABM this afternoon. It will likely be this Friday or Monday for approval now.

Bryan Hulen
Steelcon, Inc.

From: Brad Oddo <brad@foughtsteel.com>
Sent: Wednesday, July 28, 2021 12:27 PM
To: steelconinc@comcast.net
Cc: Pamela McGowan <PamelaM@foughtsteel.com>; Jeremy Stam <Jeremy.Stam@foughtsteel.com>; Patty Chitwood <pattyc@foughtsteel.com>
Subject: FW: 4340 - RE: Index-Galena Rd. - Girder design changes

Bryan –

See attached and below. Let me know if this impacts the shop drawing IFA date.

I'll need an updated ABM as soon as possible.

Thanks –

Brad Oddo
Senior Project Manager
Fought & Co/REFA Erection
Direct: 503-718-3141 Ext 123
Mobile: 971-271-3985
Email: brad@foughtsteel.com

FOUGHT & COMPANY

REFA STEEL ERECTORS

From: Brad Oddo
Sent: Wednesday, July 28, 2021 10:26 AM
To: 'Jason Warren' <JWarren@highmarkcc.com>

CHANGE ORDER #6
12/9/2021
Justification Attachment 2
Page 28 of 33

Cc: Jon Harris <JHarris@highmarkcc.com>
Subject: 4340 - RE: Index-Galena Rd. - Girder design changes

Jason –

Thanks for sending these over. I'll keep an eye out for the stamped version, but we'll incorporate these right away.

It appears this will affect our advance bill purchase. I'll let you know of cost impact and shop drawing delay, if any, as soon as I can.

Thanks –

Brad Oddo
Senior Project Manager
Fought & Co/REFA Erection
Direct: 503-718-3141 Ext 123
Mobile: 971-271-3985
Email: brad@foughtsteel.com

From: Jason Warren <JWarren@highmarkcc.com>
Sent: Wednesday, July 28, 2021 10:18 AM
To: Brad Oddo <brad@foughtsteel.com>
Cc: Jon Harris <JHarris@highmarkcc.com>
Subject: Index-Galena Rd. - Girder design changes
Importance: High

Brad,

I just received these markups from the county today and they will be following up with a stamped version in a day or two. Please adjust the shop drawings accordingly, I understand if this delays them.

Thanks,

Jason Warren
Field Engineer Structures Group

JWarren@HighmarkCC.com
C 253.204.0704 | O 360.829.5189 | F 360.829.5473
P.O. Box 1713 Buckley, WA 98321

CHANGE ORDER #6
12/9/2021
Justification Attachment 2
Page 29 of 33

Confidentiality Notice: This email may contain confidential and privileged information. The information contained in this email is intended for the addressee only. If you are not the addressee of this email, please do not review, disclose, copy, or distribute it. If you have received this email by mistake, please telephone us immediately and delete it.

Engineer of Record (WSP) Independant Estimate (Flange Width Change), page 1 of 1

		Old T (in)	New T (in)	Delta (in)	Old Width (ft)	New Width (ft)	Delta width(ft)	Length (ft)	Qty	added weight from t	added weight from W
Splice 1	Top Flange Outside splice	1.5	1.5	0	2.00	2.92	0.92	35.08	3	0	5909

Weight of Steel 490 lbs/ft3

	QTY	Unit Price	Units	Price
New steel	5909	$ 1.43	Lbs	$ 8,450.37
Labor	10	$ 75.00	hours	$ 750.00

Fab assumed internal markup		30%	$	2,535.11
	Subtotal		$	11,735.48
Material Markup		21%	$	2,464.45
	Subtotal		$	14,199.93
Sub markup		12%	$	1,703.99
WSP estimate			$	15,903.92
			$	15,048.00
Sub marku		12%	$	1,805.76
GBI			$	16,853.76

106%

CHANGE ORDER #6
12/9/2021
Justification Attachment 3
Page 30 of 33

Engineer of Record (WSP) Independant Estimate (Splice Plate Change), page 1 of 3

		Old T (in)	New T (in)	Delta (in)	Old Length (ft)	New Length (ft)	Delta length(ft)	Width (ft)	Qty	Added weight from t	Added weight from L	Total
Splice 1	Top Flange Outside splice	0.875	1.25	0.375	3.08	3.83	0.75	1.67	1	79	64	427
	Top Flange Inside splice	0.875	1.25	0.375	3.08	3.83	0.75	0.75	2	71	57	385
	Top Filler Plate	0.25	0.25	0	1.54	2.29	0.75	1.67	1	0	13	38
	Bottom Flange Outside splice	0.875	1.25	0.375	3.58	4.58	1.00	0.92	2	101	94	583
	Bottom Flange Inside splice	0.875	1.25	0.375	3.58	4.58	1.00	0.92	2	101	94	583
	Bottom Filler Plate	0.25	0.25	0	1.79	2.79	1.00	2.00	1	0	20	61
Splice 2	Top Flange Outside splice	0.875	1.25	0.375	3.08	3.83	0.75	1.67	1	79	64	427
	Top Flange Inside splice	0.875	1.25	0.375	3.08	3.83	0.75	0.75	2	71	57	385
	Top Filler Plate	0.25	0.25	0	1.54	2.29	0.75	1.67	1	0	13	38
	Bottom Flange Outside splice	0.875	1.25	0.375	3.58	4.58	1.00	0.92	2	101	94	583
	Bottom Flange Inside splice	0.875	1.25	0.375	3.58	4.58	1.00	0.92	2	101	94	583
	Bottom Filler Plate	0.25	0.25	0	1.79	2.79	1.00	2.00	1	0	20	61

total (for 3 Girders) 4154

Piece Summary	
Top Flange Outside splice	855
Top Flange Inside splice	769
Top Filler Plate	77
Bottom Flange Outside splice	1165
Bottom Flange Inside splice	1165
Bottom Filler Plate	123
	4154

Girders 3

490 lbs/ft3

CHANGE ORDER #6
12/9/2021
Justification Attachment 4
Page 31 of 33

Engineer of Record (WSP) Independant Estimate (Splice Plate Change), page 2 of 3

Fabrication	QTY	Units	Unit Price	Price
New steel	4154	Lbs	$ 1.27	$ 5,274.96
Shop Labor	3	hours	$ 75.00	$ 225.00
			Subtotal	$ 5,499.96
	Fab assumed internal markup		30%	$ 1,649.99
			Fabrication Subtotal	$ 7,149.95

Hardware	QTY	Units	Unit Price	Price	
Bolts	24	EA	$ 4.95	$ 118.80	
Washers	48	EA	$ 0.67	$ 32.16	
Nuts	24	EA	$ 1.14	$ 27.36	
Added Bolt Length	1872	EA	$ 0.99	$ 1,853.28	20% increase in L
			Subtotal	$ 2,031.60	
			Fab Subtotal	$ 7,149.95	
			Bolt Subtotal	$ 2,031.60	
		Material Markup	21%	$ 1,928.13	
			Material Subtotal	$ 11,109.68	

Labor

	QTY	Units	Unit Price	Price	
Iron Workers	24	Hours	$ 74.95	$ 1,798.80	(3) @ 1 day
Operator	8	hours	$ 73.41	$ 587.28	
			Subtotal	$ 2,386.08	
		Labor Markup	29%	$ 691.96	
			Labor Subtotal	$ 3,078.04	

Equipment

	QTY	Units	Unit Price	Price
Crane	8	Hours	$ 200.68	$ 1,605.44
			Subtotal	$ 1,605.44
		Equipment Markup	21%	$ 337.14
			Equipment Subtotal	$ 1,942.58
			CO Subtotal	$ 16,130.31
		Sub markup	12%	$ 1,935.64
	WSP estimate			$ 18,065.94
	GBI			$ 25,329.00 140%

CHANGE ORDER #6
12/9/2021
Justification Attachment 4
Page 32 of 33

Splice plate thickness increased in length and thickness. WSP's estimate accounts for the delta in steel weight only.

Contractor purchased the original splice plates prior to the change made by the County. Contractor's cost proposal represents purchasing all new splice plates. The County agrees that this change and the cost for the new splice plates (not the delta) is the owner's responsibility. (S.Chi 12/10/2021)

Engineer of Record (WSP) Independant Estimate (Splice Plate Change), page 3 of 3

		Bid bolts			CO Bolts				
		L	W	total	L (left)	W (Left)	L (Right)	W (Right)	Total
Splice 1	Top Flange	12	6	72	9	4	6	6	72
	Bottom Flange	14	6	84	11	4	7	6	86
Splice 2	Top Flange	12	6	72	6	6	9	4	72
	Bottom Flange	14	6	84	7	6	11	4	86
			Total	312				Total	316

Delta	4	/splice
	24	2 splice locations, 3 girders