SNOHOMISH COUNTY DEPARTMENT OF PUBLIC WORKS	CHANGE ORDER	CHANGE ORDER NUMBER
		6
		12/9/2021
		Page 1 of 7

☒ORDERED BY ENGINEER UNDER SECTION 1-04.4 OF THE STANDARD SPECIFICATIONS. ☐CHANGE PROPOSED BY CONTRACTOR.	**PROJECT IDENTIFICATION** **PROJECT NAME:** Index-Galena Road Flood Repair, MP 6.4-6.9 **PROJECT NUMBER:** RC1532, RC1774, RR6322, ER-0701(063)
CONTRACTOR ENDORSEMENT: Dennis Diteman Digitally signed by Dennis Diteman DN: C=US, E=dennisd@goodfellowbros.com, O=Goodfellow Bros, OU=Project Manager, CN=Dennis Diteman Date: 2021.12.16 13:32:50-08'00' *SIGNATURE* *DATE* Project Manager *PRINT NAME* *TITLE*	**CONTRACTOR:** Goodfellow Bros., LLC **ADDRESS:** PO Box 598 Wenatchee, WA 98807

All work, materials, and measurements to be in accordance with the provisions of the Standard Specifications and Special Provisions for the type of construction involved.

In consideration of Standard Specifications Section 1-04.4, make the following revisions to the Contract:

Description of Work
As shown on sheets 2 through 7 of this Change Order, revise the Steel Girder Bottom Flange details on sheets BR14, BR15, BR18, and BR19; and the Steel Girder Field Splice Nos. 1 and 2 Details, as shown on sheets BR20 and BR21.

RC1532, Group 1
Add Bid Item #176 – "Steel Girder Revisions", in the amount of 0.75 LS.

RC1774, Group 2
Add Bid Item #176 – "Steel Girder Revisions", in the amount of 0.25 LS.

Measurement and Payment
Payment for this work will be by an equitable adjustment under the new lump sum item:

New Bid Item #176 – "Steel Girder Revisions", shall be paid at the agreed lump sum of $40,548.23.

All costs in connection with these steel girder revisions shall be included in the lump sum item.

Contract Time
This change order has no effect on Contract Time.

Condition of Award
This change order does not affect the Condition of Award.

ORIGINAL CONTRACT AMOUNT	*CURRENT CONTRACT AMOUNT*	*ESTIMATED NET CHANGE THIS ORDER*	*ESTIMATED CONTRACT TOTAL AFTER CHANGE*
$18,105,074.00	**$18,193,278.98**	**$40,548.23**	**$18,233,827.21**

OTHER APPROVAL RECOMMENDED	**OTHER APPROVAL RECOMMENDED**
SIGNATURE / REPRESENTING *DATE*	*SIGNATURE / REPRESENTING* *DATE*
APPROVAL RECOMMENDED Brian Larmore Digitally signed by Brian Larmore Date: 2021.12.17 09:16:31 -08'00'	**APPROVED** Janice L Fahning Digitally signed by Janice L Fahning Date: 2021.12.17 09:51:46 -08'00'
CONSTRUCTION MANAGER *DATE*	*ENGINEERING SERVICES DIRECTOR* *DATE*

<$100,000

Copyright © WSP USA Inc. All Rights Reserved.

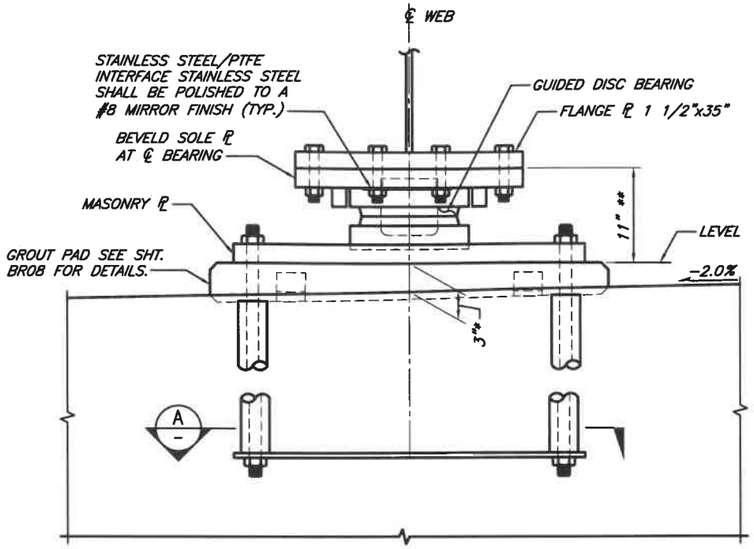

ELEVATION – PIER 1 BEARING

PIER REINFORCEMENT NOT SHOWN FOR CLARITY

* GROUT PAD ELEVATIONS ARE BASED ON ASSUMED DISC BEARING HEIGHT. ADJUST SHALL BE MADE TO GROUT PAD ELEVATION BASED ON FINAL DISC BEARING DESIGN UNDER DEAD LOAD.

** ASSUMED DISK BEARING HEIGHT

PIER	BRG. QTY.
1	3

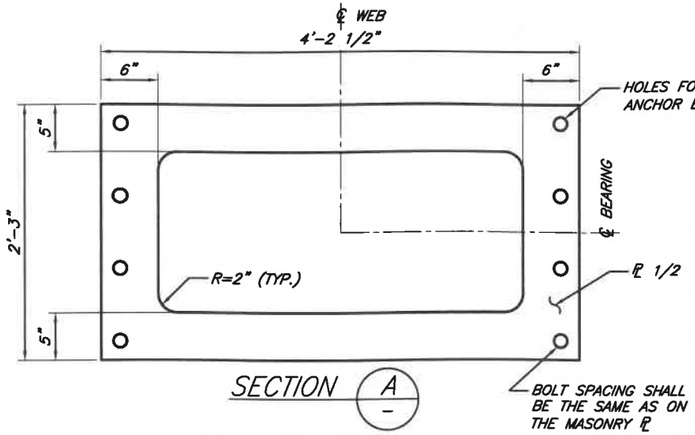

SECTION A

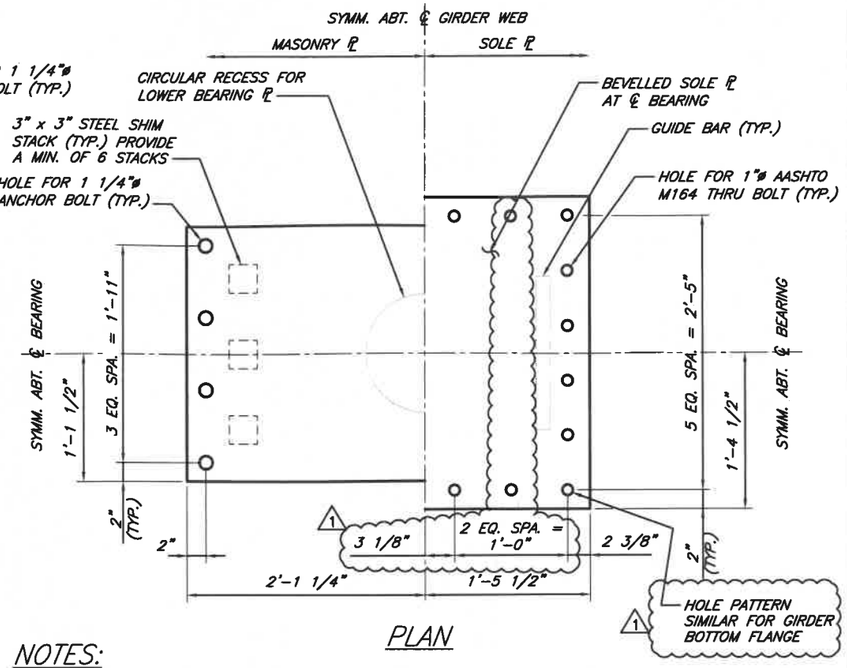

PLAN

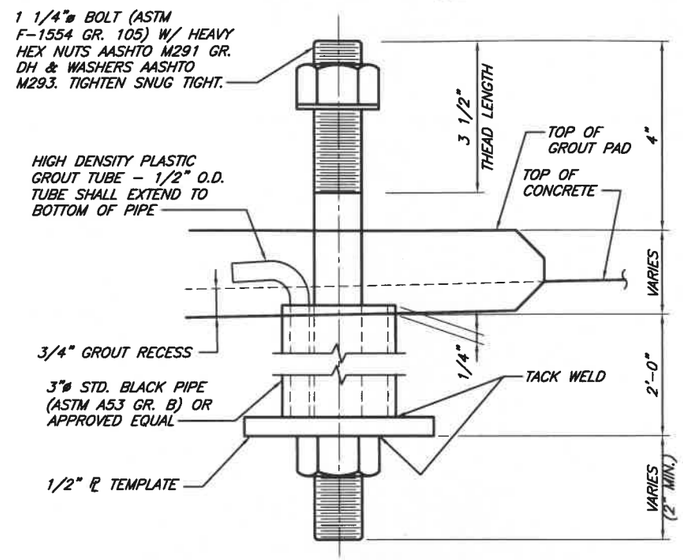

ANCHOR BOLT DETAIL

ANCHOR BOLTS SHALL BE HOT DIP GALVANIZED IN ACCORDANCE WITH AASHTO M232. ORDER ANCHOR BOLTS WITH UPPLEMENTARY REQUIREMENTS S2, S3 AND S4.

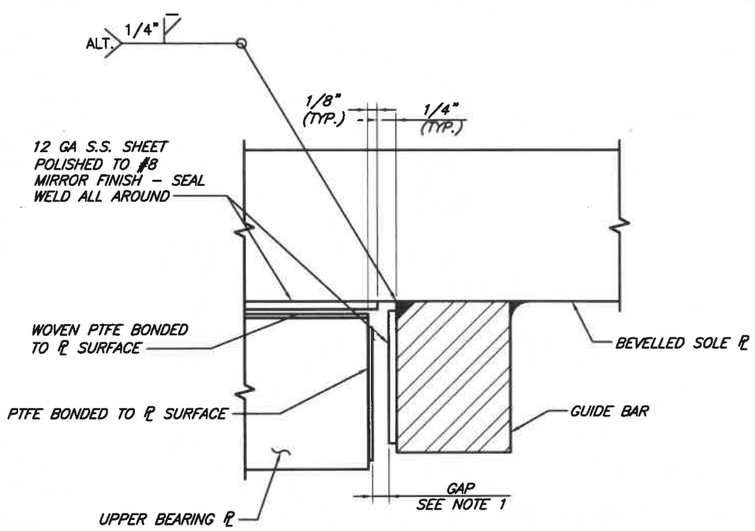

GUIDE BAR DETAIL

PIER 1 BEARING DESIGN LOADS TABLE

DIRECTION	LOAD CASE	LOAD
VERTICAL	DEAD LOAD (SERVICE)	225
VERTICAL	LIVE LOAD + IM (SERVICE)	390
LATERAL	DL + (LL + IMP) + W + TEMP (SERVICE)	30
MAX. VERTICAL	DEAD LOAD + LIVE LOAD + IM (STRENGTH)	690
LATERAL	DL + (LL + IMP) + W + TEMP (STRENGTH)	35
MAX. VERTICAL	DEAD LOAD + SEISMIC (MAX) (EXTREME)	445
MIN. VERTICAL	DEAD LOAD + SEISMIC (MIN) (EXTREME)	280
LATERAL TRANSV.	DEAD LOAD + SEISMIC (MAX) (EXTREME)	270
LATERAL LONGIT.	DEAD LOAD + SEISMIC (MAX) (EXTREME)	0

NOTES:

1. BEARING DIMENSIONS ARE ASSUMED. BEARING ELEMENTS SHALL BE DESIGNED BY THE MANUFACTURER IN ACCORDANCE WITH THESE DETAILS AND THE SPECIAL PROVISIONS TO RESIST THE DESIGN SERVICE, STRENGTH AND EXTREME EVENT LOADS GIVEN IN THE "BEARING DESIGN LOADS TABLE". DESIGN SHALL ALSO ACCOMMODATE A MAXIMUM SERVICE LIMIT STATE ROTATION PLUS UNCERTAINTY ALLOWANCE TOTALING 0.03 RADIANS, SERVICE LONGITUDINAL DISPLACEMENT OF 5" ± 1/4, AND TRANSVERSE DISPLACEMENT OF 1/16". ADJUSTMENT SHALL BE MADE TO GROUT PAD ELEVATION BASED ON FINAL DISC BEARING SHOP DRAWINGS.
2. BEARING ELEMENTS SHALL BE DESIGNED USING AASHTO LRFD BRIDGE DESIGN SPECIFICATIONS FOR HIGHWAY BRIDGES, 4TH EDITION 2007 AND INTERIMS THROUGH 2009.
3. FINAL MINIMUM PLATE DIMENSIONS SHOWN, INCREASE THICKNESS AS REQUIRED FOR MACHINING TO FLATNESS TOLERANCE AFTER FABRICATION.
4. BOTTOM CIRCULAR LOWER BEARING PLATE AND MASONRY PLATE SHALL BE MACHINED TO PROVIDE A CLASS LC-6 FIT.
5. SOLE AND MASONRY PLATES, SHALL BE AASHTO M270 GRADE 50 OR 50W STEEL UNLESS NOTED OTHERWISE.
6. BEARING COMPONENTS SHALL BE REMOVABLE AND REPLACEABLE.
7. SHOP DRAWINGS AND DESIGN CALCULATIONS SHALL BE SUBMITTED TO THE ENGINEER FOR APPROVAL PRIOR TO THE MANUFACTURE OF THE BEARINGS.
8. BEARINGS SHALL BE PAINTED. RECESSED PORTIONS OF ASSEMBLED BEARINGS SHALL ONLY RECEIVE ONE COAT INORGANIC ZINC PRIMER.
9. PLATE SIZES AND BOLT PATTERNS FOR BEARING CONNECTIONS ARE BASED ON ASSUMED BEARING DIMENSIONS AND SHALL BE ADJUSTED IF NECESSARY TO ACCOMMODATE FINAL BEARING DESIGN. ANY CHANGES SHALL BE SUBMITTED TO THE ENGINEER FOR APPROVAL AND VERIFIED WITH THE BEARING AND STEEL FABRICATORS.
10. ALL BEARING SHALL BE MARKED PRIOR TO SHIPPING. THE MARKS SHALL INCLUDE THE BEARING LOCATION ON THE BRIDGE, AND A DIRECTION ARROW THAT POINTS UP-STATION. ALL MARKS SHALL BE PERMANENT AND BE VISIBLE AFTER THE BEARING IS INSTALLED. MARKS SHALL BE SHOWN ON SHOP DRAWINGS.

PLAN CHECK	BY	DATE
PRINTED	--	12/16/20

CHANGE ORDER #6
12/9/2021
Page 2 of 7

DATE	NO.	REVISION	BY
4/13/21	1	RFI 004	JD SB

Last Saved by: USLC675361 on: Apr 13, 2021 2:28 PM

REGION NO.	STATE	FED. AID PROJ. NO.	SURVEY NO.
10	WASH.	ER-0701(063)	4178

DESIGNED BY: DES | DRAWN BY: TRL
FIELD BOOK(S): | UPI# 06-0150

WSP USA Inc.
33301 9th Avenue South
Suite 300
Federal Way, WA 98003-2600
TEL: (206) 431-2300
FAX: (206) 431-2250

STUART C. BENNION — STATE OF WASHINGTON — 41778 — STRUCTURAL ENGINEER — PROFESSIONAL ENGINEER
4/13/2021

APPROVED FOR CONSTRUCTION

DOUGLAS W. McCORMICK, P.E.
SNOHOMISH COUNTY ENGINEER

DATE APPROVED:

SNOHOMISH COUNTY DEPARTMENT OF PUBLIC WORKS

FUNDING NO. RC1532

INDEX–GALENA ROAD
FLOOD REPAIR MP 6.4–6.9

BEARING DETAILS
PIER 1

REFERENCE SHEET NO. BR14

SHEET 174 OF 222 SHEETS

Last Saved by: USLC675361 on: Apr 13, 2021 2:28 PM File: R:\USFDW1001\Project\2014\A14.0072\CADD\Dwgs\22_BR14.dwg

Copyright © WSP USA Inc. All Rights Reserved.

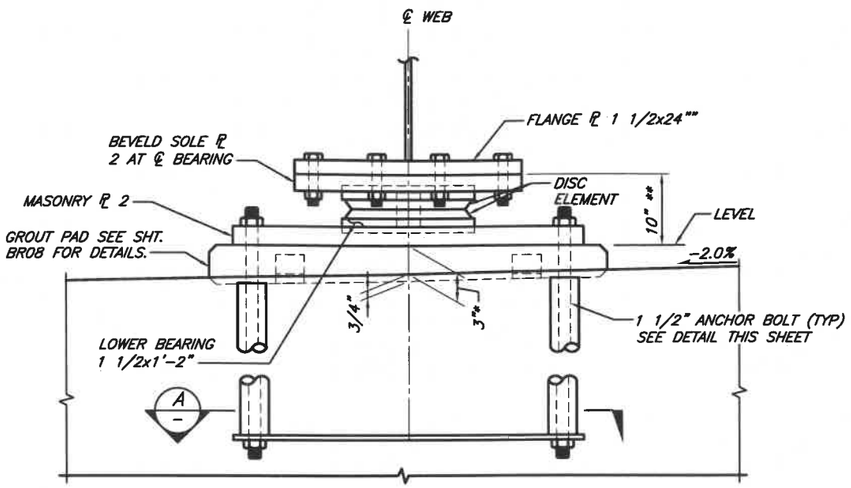

ELEVATION – PIER 2 BEARING

PIER REINFORCEMENT NOT SHOWN FOR CLARITY

* GROUT PAD ELEVATIONS ARE BASED ON ASSUMED DISC BEARING HEIGHT. ADJUST SHALL BE MADE TO GROUT PAD ELEVATION BASED ON FINAL DISC BEARING DESIGN UNDER DEAD LOAD.

** ASSUMED DISK BEARING HEIGHT

PIER	BRG. QTY.
2	3

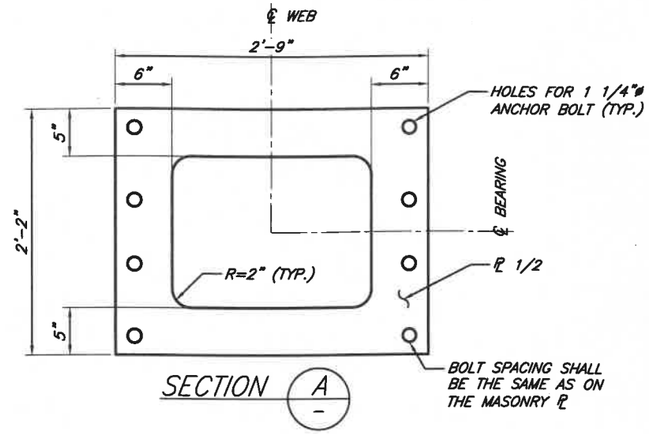

SECTION A

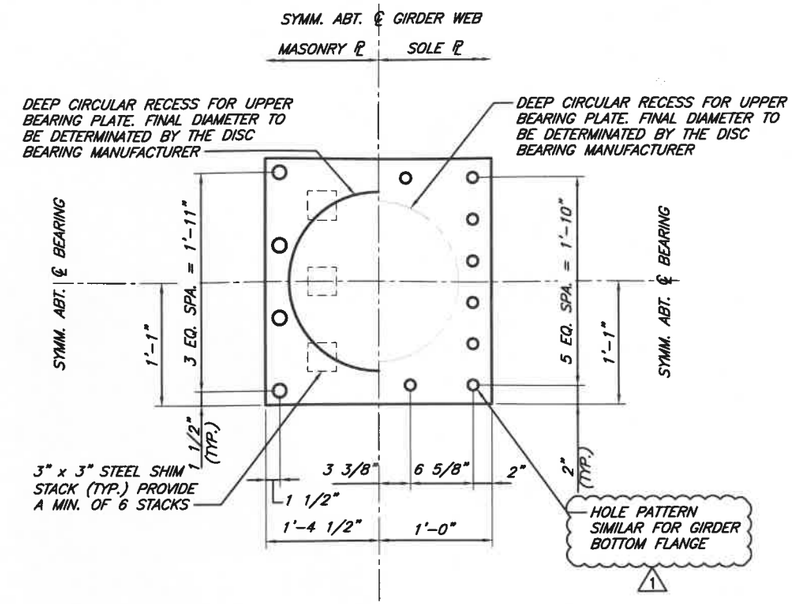

PLAN

NOTES:

1. BEARING DIMENSIONS ARE ASSUMED. BEARING ELEMENTS SHALL BE DESIGNED BY THE MANUFACTURER IN ACCORDANCE WITH THESE DETAILS AND THE SPECIAL PROVISIONS TO RESIST THE DESIGN SERVICE, STRENGTH AND EXTREME EVENT LOADS GIVEN IN THE "BEARING DESIGN LOADS TABLE". DESIGN SHALL ALSO ACCOMMODATE A MAXIMUM SERVICE LIMIT STATE ROTATION PLUS UNCERTAINTY ALLOWANCE TOTALING 0.03 RADIANS. ADJUSTMENT SHALL BE MADE TO GROUT PAD ELEVATION BASED ON FINAL DISC BEARING SHOP DRAWINGS.
2. BEARING ELEMENTS SHALL BE DESIGNED USING AASHTO LRFD BRIDGE DESIGN SPECIFICATIONS FOR HIGHWAY BRIDGES, 4TH EDITION 2007 AND INTERIMS THROUGH 2009.
3. FINAL MINIMUM PLATE DIMENSIONS SHOWN, INCREASE THICKNESS AS REQUIRED FOR MACHINING TO FLATNESS TOLERANCE AFTER FABRICATION.
4. BOTTOM CIRCULAR LOWER BEARING PLATE AND MASONRY PLATE SHALL BE MACHINED TO PROVIDE A CLASS LC-6 FIT.
5. SOLE AND MASONRY PLATES, SHALL BE AASHTO M270 GRADE 50 OR 50W STEEL UNLESS NOTED OTHERWISE.
6. BEARING COMPONENTS SHALL BE REMOVABLE AND REPLACEABLE.
7. SHOP DRAWINGS AND DESIGN CALCULATIONS SHALL BE SUBMITTED TO THE ENGINEER FOR APPROVAL PRIOR TO THE MANUFACTURE OF THE BEARINGS.
8. BEARINGS SHALL BE PAINTED. RECESSED PORTIONS OF ASSEMBLED BEARINGS SHALL ONLY RECEIVE ONE COAT INORGANIC ZINC PRIMER.
9. PLATE SIZES AND BOLT PATTERNS FOR BEARING CONNECTIONS ARE BASED ON ASSUMED BEARING DIMENSIONS AND SHALL BE ADJUSTED IF NECESSARY TO ACCOMMODATE FINAL BEARING DESIGN. ANY CHANGES SHALL BE SUBMITTED TO THE ENGINEER FOR APPROVAL AND VERIFIED WITH THE BEARING AND STEEL FABRICATORS.
10. ALL BEARING SHALL BE MARKED PRIOR TO SHIPPING. THE MARKS SHALL INCLUDE THE BEARING LOCATION ON THE BRIDGE, AND A DIRECTION ARROW THAT POINTS UP-STATION. ALL MARKS SHALL BE PERMANENT AND BE VISIBLE AFTER THE BEARING IS INSTALLED. MARKS SHALL BE SHOWN ON SHOP DRAWINGS.

PIER 2 BEARING DESIGN LOADS TABLE

DIRECTION	LOAD CASE	LOAD
VERTICAL	DEAD LOAD (SERVICE)	225
VERTICAL	LIVE LOAD + IM (SERVICE)	390
LATERAL	DL + (LL + IMP) + W + TEMP (SERVICE)	30
MAX. VERTICAL	DEAD LOAD + LIVE LOAD + IM (STRENGTH)	690
LATERAL	DL + (LL + IMP) + W + TEMP (STRENGTH)	35
MAX. VERTICAL	DEAD LOAD + SEISMIC (MAX) (EXTREME)	445
MIN. VERTICAL	DEAD LOAD + SEISMIC (MIN) (EXTREME)	280
LATERAL TRANSV.	DEAD LOAD + SEISMIC (MAX) (EXTREME)	270
LATERAL LONGIT.	DEAD LOAD + SEISMIC (MAX) (EXTREME)	190

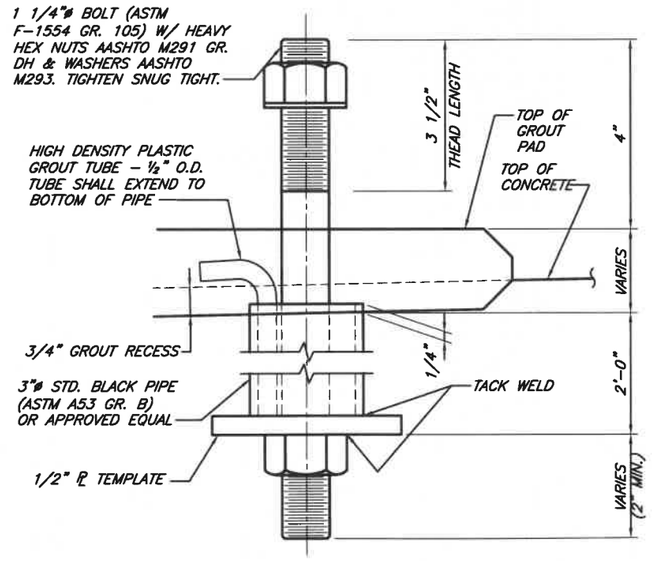

ANCHOR BOLT DETAIL

ANCHOR BOLTS SHALL BE HOT DIP GALVANIZED IN ACCORDANCE WITH AASHTO M232. ORDER ANCHOR BOLTS WITH UPPLEMENTARY REQUIREMENTS S2, S3 AND S4.

PLAN CHECK	BY	DATE
PRINTED	--	12/16/20

CHANGE ORDER #6
12/9/2021
Page 3 of 7

DATE	NO.	REVISION	BY
4/13/21	1	RFI 004	JD SB

Last Saved by: USLC675361 on: Apr 13, 2021 2:33 PM

REGION NO.	STATE	FED. AID PROJ. NO.	SURVEY NO.
10	WASH.	ER-0701(063)	4178

DESIGNED BY: DES
DRAWN BY: TRL
FIELD BOOK(S):
UPI# 06-0150

WSP USA Inc.
33301 9th Avenue South
Suite 300
Federal Way, WA 98003-2600
TEL: (206) 431-2300
FAX: (206) 431-2250

STUART C. BENNION, STATE OF WASHINGTON, 41778, ELECTRICAL ENGINEER, PROFESSIONAL ENGINEER
7/13/2021

APPROVED FOR CONSTRUCTION
DOUGLAS W. McCORMICK, P.E.
SNOHOMISH COUNTY ENGINEER
DATE APPROVED:

SNOHOMISH COUNTY DEPARTMENT OF PUBLIC WORKS
FUNDING NO. RC1532

INDEX-GALENA ROAD
FLOOD REPAIR MP 6.4-6.9

BEARING DETAILS
PIER 2

REFERENCE SHEET NO. BR15
SHEET 175 OF 222 SHEETS

Last Saved by: USLC675361 on: Apr 13, 2021 2:33 PM File: R:\USFDW100\Project\2014\A14.0072\CADD\Dwgs\22_BR15.dwg

Copyright © WSP USA Inc. All Rights Reserved.

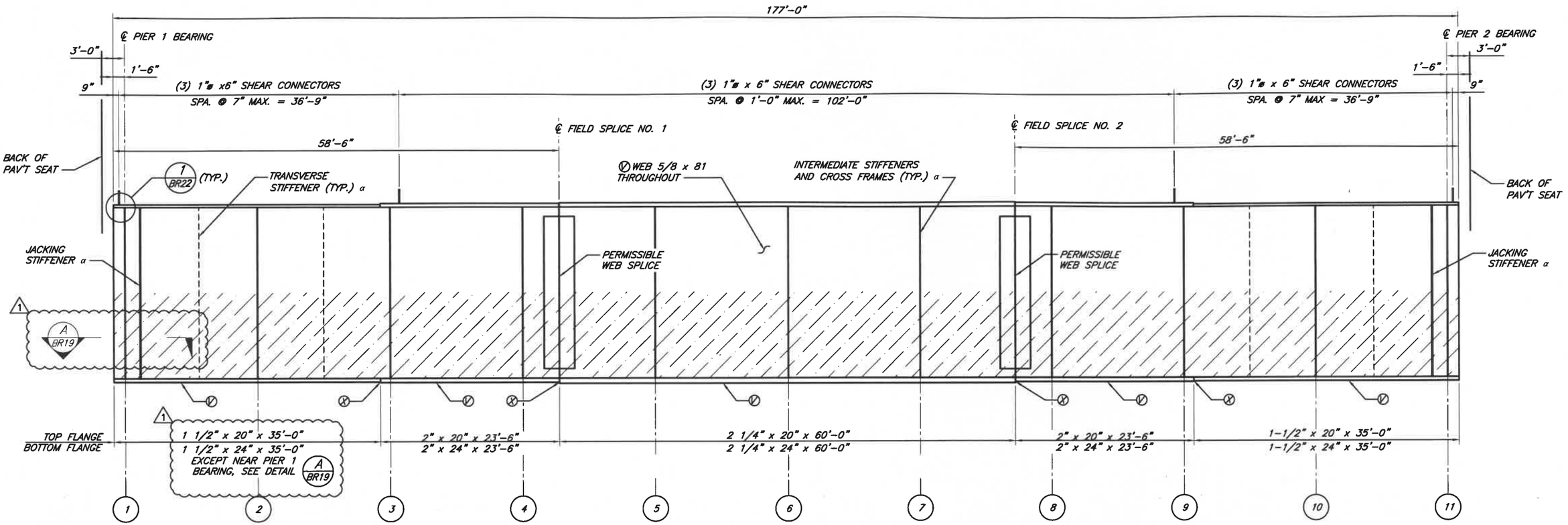

GIRDER ELEVATION

GIRDER B SHOWN, GIRDERS A & C SIMILAR

- ⓥ DENOTES MAIN LOAD CARRYING MEMBER COMPONENTS SUBJECT TO TENSILE STRESS.
- ⊗ DENOTES TENSION BUTT WELD FOR FLANGES OR WEBS.
- α TRANSVERSE STIFFENER (TYP.) FOR LOCATIONS SEE SHT. BR17 AND FOR MISC DETAILS SEE SHT. BR19.
- STEEL GIRDER TENSION REGIONS (USE FOR INSPECTION AND REPAIRS)

PLAN CHECK	BY	DATE
PRINTED	--	12/16/20

CHANGE ORDER #6
12/9/2021
Page 4 of 7

DATE	NO.	REVISION	BY
4/13/21	1	RFI 004	JD SB

Last Saved by: USLC675361 on: Apr 12, 2021 6:47 AM

REGION NO.	STATE	FED. AID PROJ. NO.	SURVEY NO.
10	WASH.	ER-0701(063)	4178

DESIGNED BY: DES
DRAWN BY: TRL
FIELD BOOK(S):
UPI# 06-0150

WSP USA Inc.
33301 9th Avenue South
Suite 300
Federal Way, WA 98003-2600
TEL: (206) 431-2300
FAX: (206) 431-2250

STUART C. BENNION — STATE OF WASHINGTON — 41771 — PROFESSIONAL ENGINEER
4/13/2021

APPROVED FOR CONSTRUCTION

DOUGLAS W. McCORMICK, P.E.
SNOHOMISH COUNTY ENGINEER

DATE APPROVED:

SNOHOMISH COUNTY DEPARTMENT OF PUBLIC WORKS

FUNDING NO. RC1532

INDEX-GALENA ROAD
FLOOD REPAIR MP 6.4-6.9

GIRDER ELEVATION

REFERENCE SHEET NO. BR18

SHEET 178 OF 222 SHEETS

Last Saved by: USLC675361 on: Apr 12, 2021 6:47 AM File: R:\USFDW100\Project\2014\A14.0072\CADD\Dwgs\22_BR18.dwg

Copyright © WSP USA Inc. All Rights Reserved.

Addendum 5

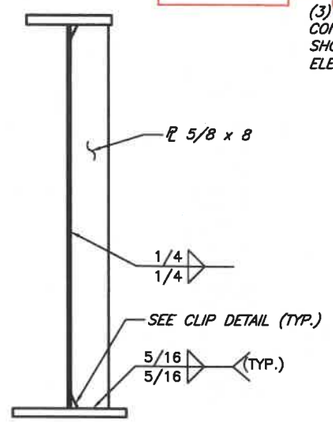

TYPICAL STIFFENER BETWEEN CROSSFRAMES

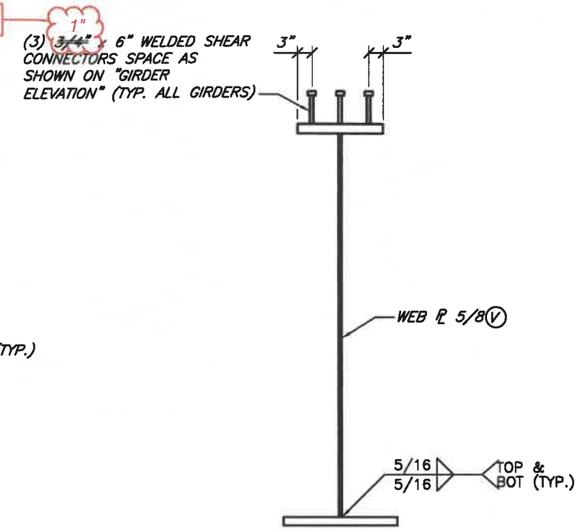

TYPICAL GIRDER SECTION

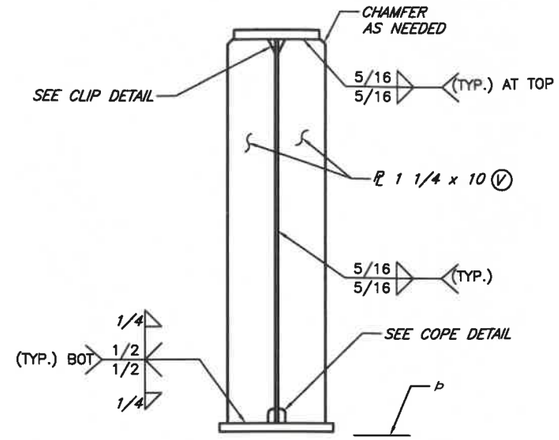

BEARING AND JACKING STIFFENERS

P FLATNESS TOLERANCE AT BEARINGS SHALL MEET AWS D1.5 SECT 3.5.1.9.

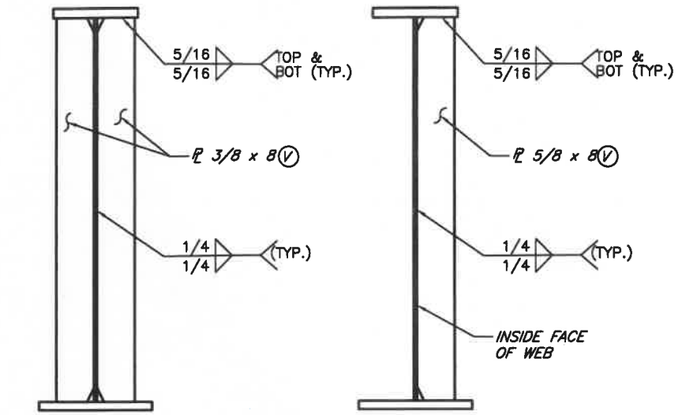

TYPICAL STIFFENER AT INTERMEDIATE CROSSFRAMES

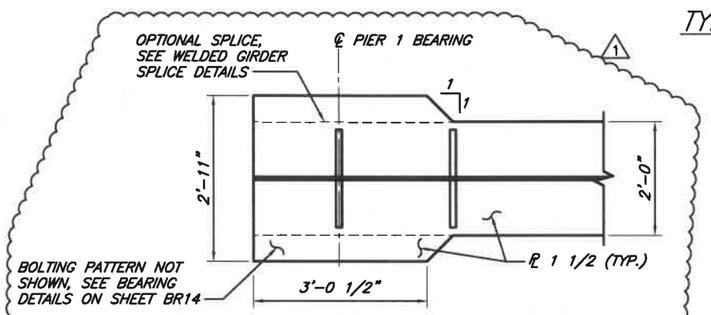

BOTTOM FLANGE AT PIER 1 BEARING (A / BR18)

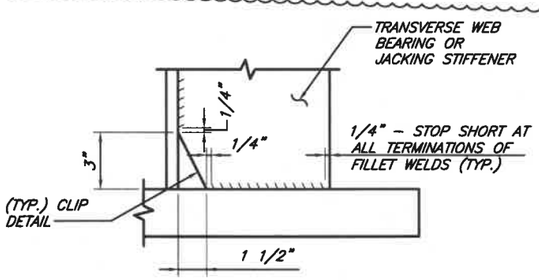

TYPICAL FILLET WELD TERMINATION DETAIL

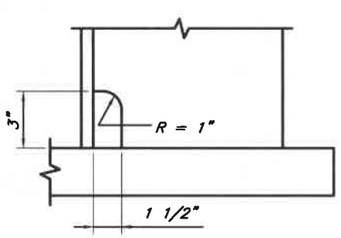

BEARING STIFFENER COPE DETAIL

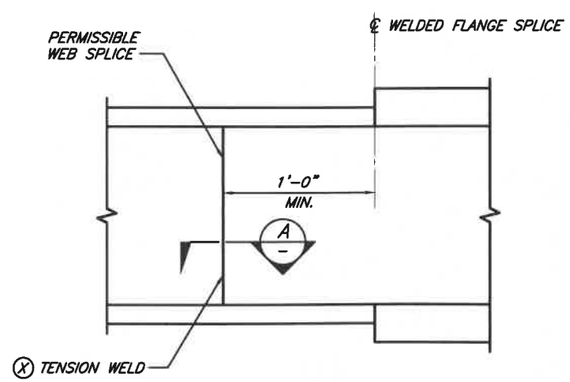

ELEVATION

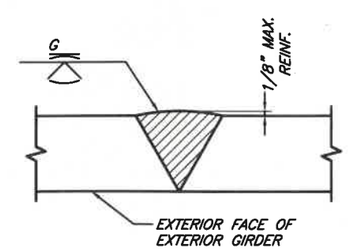

SECTION (A / –)

PERMISSIBLE WEB SPLICE

* GRIND LONGITUDINALLY PARALLEL TO FLANGE. BACK GOUGE BEFORE WELDING SECOND SIDE.

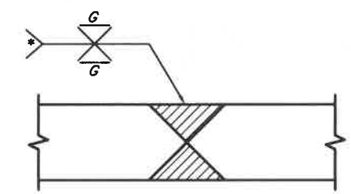

EQUAL THICKNESS
TENSION OR COMPRESION FLANGE SPLICE

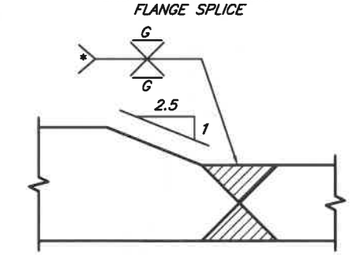

UNEQUAL THICKNESS
TENSION OR COMPRESION FLANGE SPLICE

WELDED GIRDER SPICE DETAILS

FABRICATOR MAY SUBSTITUTE B-L2C-S AND B-U2-GF FOR B-U3C-S AND B-U3-GF RESPECTIVELY. SUBJECT TO THICKNESS LIMITATIONS.

PLAN CHECK	BY	DATE
PRINTED	--	12/16/20

CHANGE ORDER #6
12/9/2021
Page 5 of 7

DATE	NO.	REVISION	BY
4/13/21	1	RFI 004	JD SB

Last Saved by: USLC675361 on: Apr 13, 2021 2:40 PM

REGION NO.	STATE	FED. AID PROJ. NO.	SURVEY NO.
10	WASH.	ER-0701(063)	4178

DESIGNED BY: DES
DRAWN BY: TRL
FIELD BOOK(S):
UPI# 06-0150

WSP USA Inc.
33301 9th Avenue South
Suite 300
Federal Way, WA 98003-2600
TEL: (206) 431-2300
FAX: (206) 431-2250

STUART C. BENNION — STATE OF WASHINGTON — 41178 — PROFESSIONAL ENGINEER
4/13/2021

APPROVED FOR CONSTRUCTION

DOUGLAS W. McCORMICK, P.E.
SNOHOMISH COUNTY ENGINEER

DATE APPROVED:

SNOHOMISH COUNTY DEPARTMENT OF PUBLIC WORKS

FUNDING NO. RC1532

INDEX-GALENA ROAD
FLOOD REPAIR MP 6.4-6.9

GIRDER STIFFENER DETAILS

REFERENCE SHEET NO. BR19

SHEET 179 OF 222 SHEETS

Last Saved by: USLC675361 on: Apr 13, 2021 2:40 PM File: R:\USFDW1100\Project\2014\A14.0072\CAD\Dwgs\22_BR19.dwg

Copyright © WSP USA Inc. All Rights Reserved.

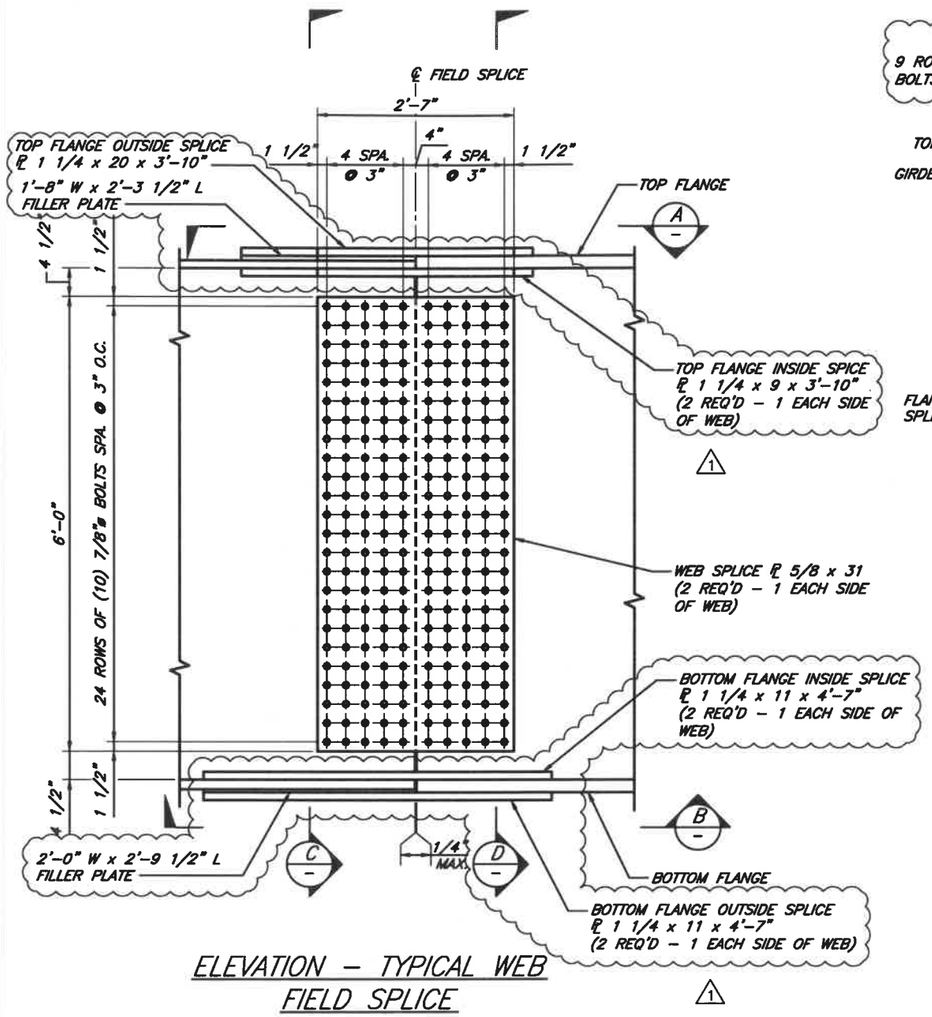

ELEVATION – TYPICAL WEB FIELD SPLICE

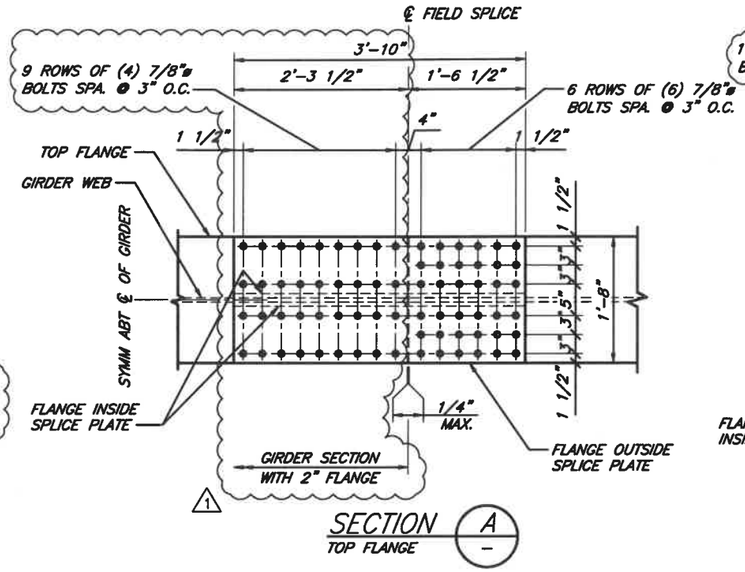

SECTION A
TOP FLANGE

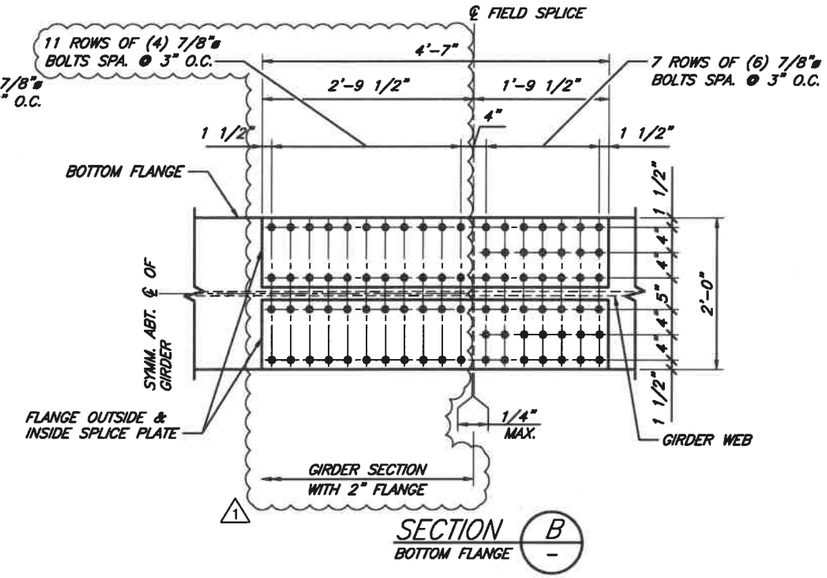

SECTION B
BOTTOM FLANGE

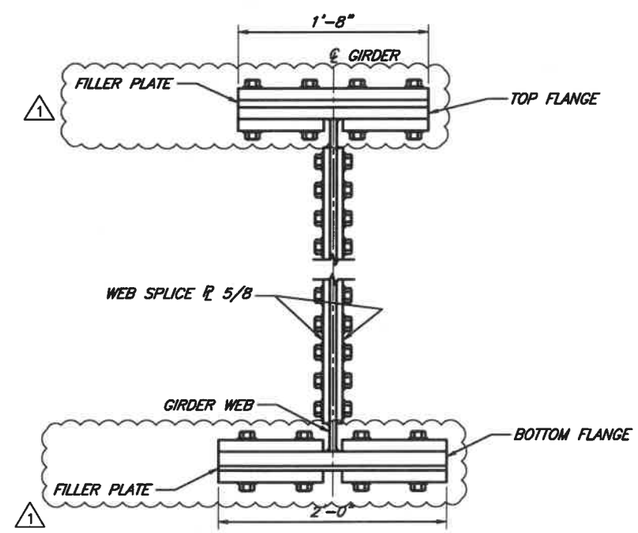

SECTION C

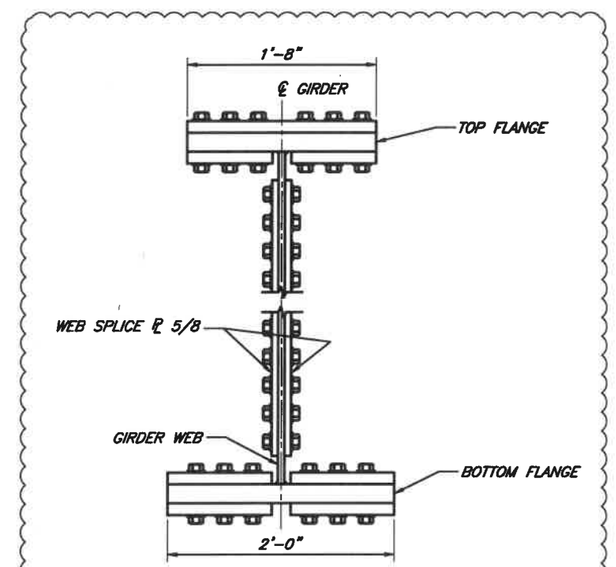

SECTION D

NOTES:

1. WEB SPLICE BOLTS SHALL BE TIGHTENED BEGINNING WITH ROWS OF BOLTS NEAREST TO CENTERLINE OF WEB SPLICE AND PROCEEDING OUTWARD.
2. FOR LOCATION OF GIRDER FIELD SPLICES, SEE 'FRAMING PLAN'.
3. ALL SPLICE PLATE MATERIAL SHALL BE SUBJECTED TO CHARPY V-NOTCH REQUIREMENTS, SEE SPECIFICATIONS.
4. ALL FIELD SPLICE HIGH STRENGTH BOLTED CONNECTIONS SHALL CONFORM TO AASHTO SPECIFICATIONS FOR SLIP-CRITICAL JOINTS CLASS A, SLIP COEFFICIENT 0.33. HARDENED STEEL WASHERS SHALL BE USED UNDER THE TURNED ELEMENT.

PLAN CHECK	BY	DATE
PRINTED	--	12/16/20

CHANGE ORDER #6
12/9/2021
Page 6 of 7

DATE	NO.	REVISION	BY
7/30/21	1	REVISION 5 – GIRDER SPLICE	BF SB

Last Saved by: USPL675440 on: Jul 30, 2021 11:46 AM

REGION NO.	STATE	FED. AID PROJ. NO.	SURVEY NO.
10	WASH.	ER-0701(063)	4178

DESIGNED BY: DES
DRAWN BY: TRL
FIELD BOOK(S):
UPI# 06-0150

WSP USA Inc.
33301 9th Avenue South
Suite 300
Federal Way, WA 98003-2600
TEL: (206) 431-2300
FAX: (206) 431-2250

STUART C. BENNION
STATE OF WASHINGTON
41778
PROFESSIONAL ENGINEER
7/30/2021

APPROVED FOR CONSTRUCTION

DOUGLAS W. McCORMICK, P.E.
SNOHOMISH COUNTY ENGINEER

DATE APPROVED:

SNOHOMISH COUNTY DEPARTMENT OF PUBLIC WORKS

FUNDING NO. RC1532

INDEX–GALENA ROAD
FLOOD REPAIR MP 6.4–6.9

GIRDER DETAILS
FIELD SPLICE NO. 1

REFERENCE SHEET NO. BR20

SHEET 180 OF 222 SHEETS

Last Saved by: USPL675440 on: Jul 30, 2021 11:46 AM File: C:\Users\USPL675440\WSP O365\Civil-Federal Way - Projects\A14.0072\CADD\Dwgs\22_BR20.dwg

Copyright © WSP USA Inc. All Rights Reserved.

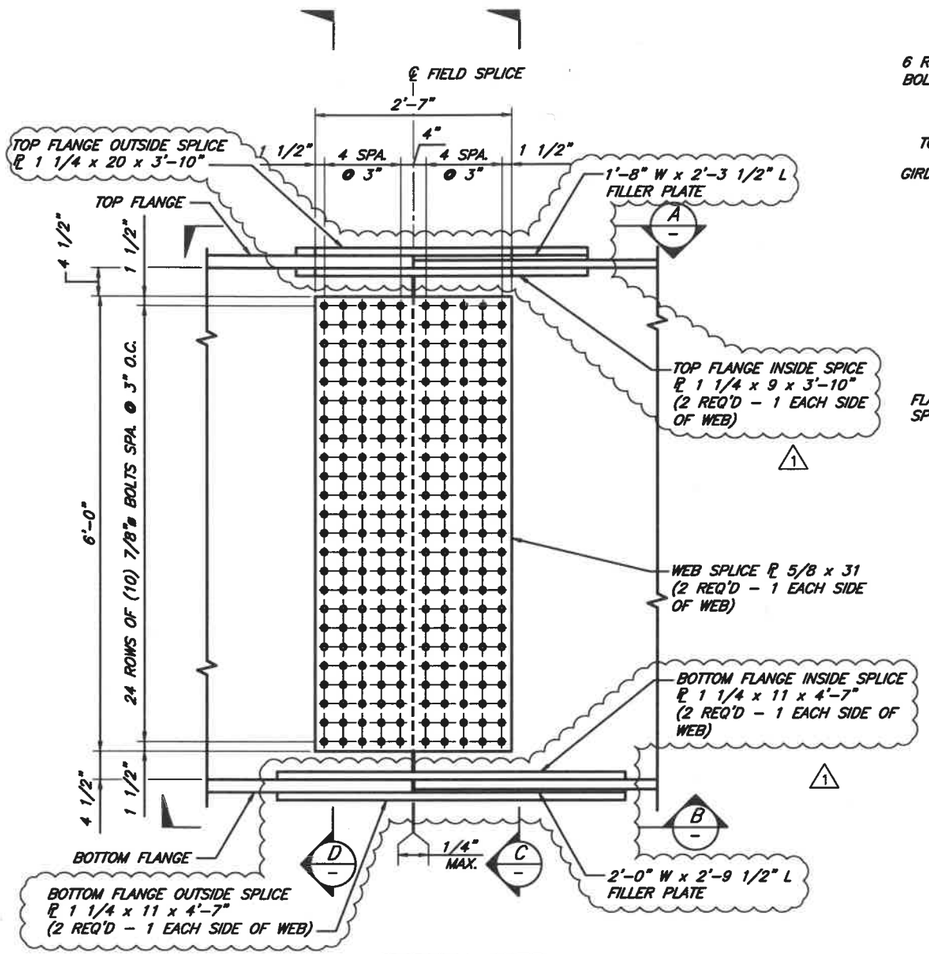

ELEVATION – TYPICAL WEB FIELD SPLICE

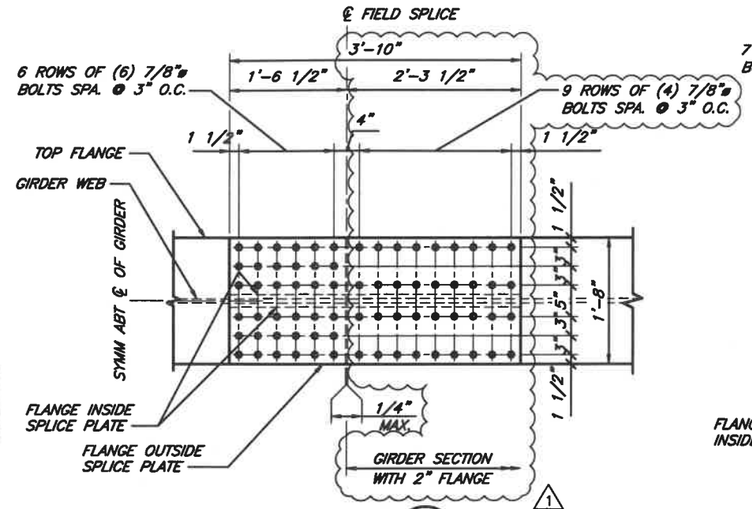

SECTION A
TOP FLANGE

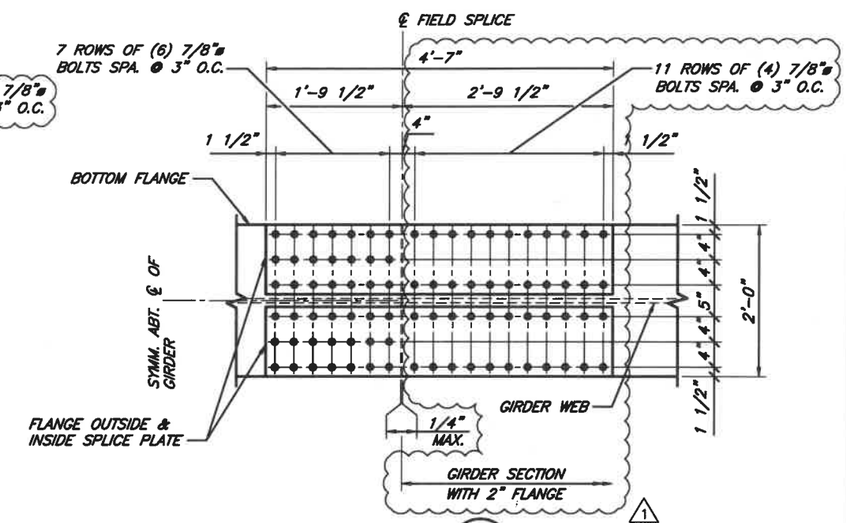

SECTION B
BOTTOM FLANGE

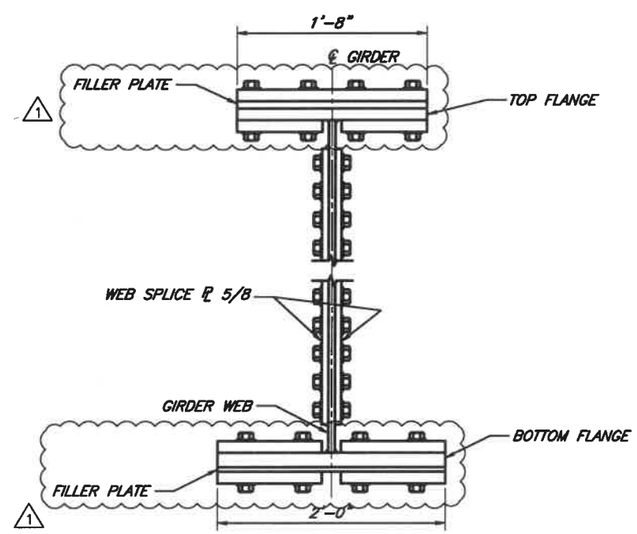

SECTION C

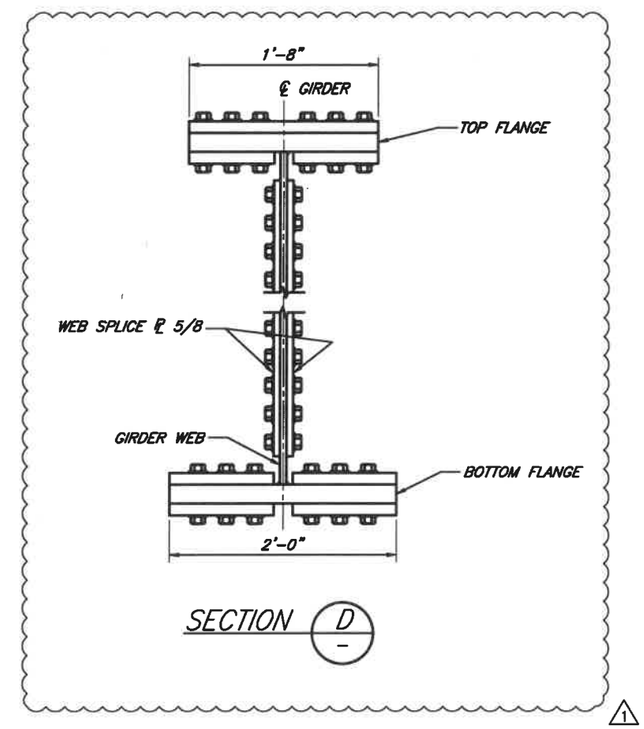

SECTION D

NOTES:

1. WEB SPLICE BOLTS SHALL BE TIGHTENED BEGINNING WITH ROWS OF BOLTS NEAREST TO CENTERLINE OF WEB SPLICE AND PROCEEDING OUTWARD.
2. FOR LOCATION OF GIRDER FIELD SPLICES, SEE 'FRAMING PLAN'.
3. ALL SPLICE PLATE MATERIAL SHALL BE SUBJECTED TO CHARPY V-NOTCH REQUIREMENTS, SEE SPECIFICATIONS.
4. ALL FIELD SPLICE HIGH STRENGTH BOLTED CONNECTIONS SHALL CONFORM TO AASHTO SPECIFICATIONS FOR SLIP-CRITICAL JOINTS CLASS A, SLIP COEFFICIENT 0.33. HARDENED STEEL WASHERS SHALL BE USED UNDER THE TURNED ELEMENT.

PLAN CHECK	BY	DATE
PRINTED	--	12/16/20

CHANGE ORDER #6
12/9/2021
Page 7 of 7

DATE	NO.	REVISION	BY	
7/30/21	1	REVISION 5 – GIRDER SPLICE	BF	SB

Last Saved by: USPL675440 on: Jul 30, 2021 11:46 AM

REGION NO.	STATE	FED. AID PROJ. NO.	SURVEY NO.
10	WASH.	ER-0701(063)	4178

DESIGNED BY: DES
DRAWN BY: TRL
FIELD BOOK(S):
UPI# 06-0150

WSP USA Inc.
33301 9th Avenue South
Suite 300
Federal Way, WA 98003-2600
TEL: (206) 431-2300
FAX: (206) 431-2250

STUART C. BENNION, STATE OF WASHINGTON, 41778, PROFESSIONAL ENGINEER
7/30/2021

APPROVED FOR CONSTRUCTION
DOUGLAS W. McCORMICK, P.E.
SNOHOMISH COUNTY ENGINEER
DATE APPROVED:

SNOHOMISH COUNTY DEPARTMENT OF PUBLIC WORKS
FUNDING NO. RC1532

INDEX–GALENA ROAD
FLOOD REPAIR MP 6.4–6.9

GIRDER DETAILS
FIELD SPLICE NO. 2

REFERENCE SHEET NO. BR21
SHEET 181 OF 222 SHEETS

Last Saved by: USPL675440 on: Jul 30, 2021 11:46 AM File: C:\Users\USPL675440\WSP O365\Civil-FederalWay - Projects\A14.0072\CADD\Dwgs\22_BR21.dwg