SNOHOMISH COUNTY DEPARTMENT OF PUBLIC WORKS	CHANGE ORDER	CHANGE ORDER NUMBER
		5
		2/11/2022
		Page 1 of 15

☒ORDERED BY ENGINEER UNDER SECTION 1-04.4 OF THE STANDARD SPECIFICATIONS. ☐CHANGE PROPOSED BY CONTRACTOR.	**PROJECT IDENTIFICATION** **PROJECT NAME:** Index-Galena Road Flood Repair, MP 6.4-6.9 **PROJECT NUMBER:** RC 1532, RC 1774, RR6322, ER-0701(063)
CONTRACTOR ENDORSEMENT: Dennis Diteman Digitally signed by Dennis Diteman DN: C=US, E=dennisd@goodfellowbros.com, O=Goodfellow Bros, OU=Project Manager, CN=Dennis Diteman Date: 2022.03.18 15:21:30-07'00' *SIGNATURE* *DATE* Dennis Diteman, Project Manager *PRINT NAME* *TITLE*	**CONTRACTOR:** Goodfellow Bros., LLC **ADDRESS:** PO Box 598 Wenatchee, WA 98807

All work, materials, and measurements to be in accordance with the provisions of the Standard Specifications and Special Provisions for the type of construction involved.

In consideration of the Standard Specifications Section 1-04.4, make the following revisions to the contract:

RC1532, Group 1

Description:
This Change Order compensates the Contractor for the added work associated with revisions to Contract plan sheets: TS01, TS02, TS03, TS05, TS06, PP06 through PP11 and MS04, sheets 4 through 15 of this Change Order, by revising existing unit item quantities and creating new items as follows:

Increase Bid Item #29, “Quarry Spalls”, in the amount of 90 Ton.
Increase Bid Item #89, “Temporary Seeding”, in the amount of 0.42 Acre.
Decrease Bid Item #127, “Medium Compost”, in the amount of 0.19 Acre.
Increase Bid Item #136, “Beam Guardrail Type 31 – 9 FT Long Post”, in the amount of 274 LF.
Decrease Bid Item #137, “Beam Guardrail Non-Flared Terminal”, in the amount of 4 Each.
New Bid Item #178 – “Underdrain pipe 12 in. Diameter”, in the amount of 490 LF.
New Bid Item #179 – “Construction Geotextile for Underground Drainage”, in the amount of 2048 SY.
New Bid Item #180 – “Sand Drainage Blanket for CAVFS”, in the amount of 610 CY.
New Bid Item #181 – “Temporary Seeding Equitable Adjustment”, in the amount of 1 LS.
New Bid Item #182 – “Guardrail Equitable Adjustment”, in the amount of 1 LS.

ORIGINAL CONTRACT AMOUNT	*CURRENT CONTRACT AMOUNT*	*ESTIMATED NET CHANGE THIS ORDER*	*ESTIMATED CONTRACT TOTAL AFTER CHANGE*
$18,105,074.00	**$18,170,416.71**	**$70,463.73**	**$18,240,880.44**

OTHER APPROVAL RECOMMENDED	**OTHER APPROVAL RECOMMENDED**
SIGNATURE / REPRESENTING *DATE*	*SIGNATURE / REPRESENTING* *DATE*
APPROVAL RECOMMENDED Larmore, Brian Digitally signed by Larmore, Brian Date: 2022.03.21 09:42:49 -07'00'	**APPROVED** Fahning, Janice Digitally signed by Fahning, Janice Date: 2022.03.21 10:13:16 -07'00'
CONSTRUCTION MANAGER *DATE*	*ENGINEERING SERVICES DIRECTOR* *DATE*

<$100,000

Materials
All materials incorporated into the project shall meet the requirements of all the 2020 Standard Specifications and the Contract Provisions.

Sand Drainage Blanket for CAVFS shall meet the requirements for Sand Drainage Blanket in accordance with Standard Specification 9-03.13(1).

Underdrain pipe (12" diameter) shall be perforated corrugated polyethylene that meets the requirements of Standards Specification 9-05.2(8).

Measurement
Underdrain pipe 12 in. diam will be measured by the linear foot.
Construction geotextile for underground drainage will be measured by the square yard.
Sand drainage blanket for CAVFS will be measured by the cubic yard to the neat line limits shown in the Plans.
No specific unit of measure shall apply to the new lump sum items: Temporary Seeding Equitable Adjustment, and Guardrail Equitable Adjustment.

Payment
Payment for the quantity revisions to existing bid items shall be at the existing unit prices.

Bid Item #29, "Quarry Spalls", shall be paid at the contract unit price of $45.00
Bid Item #89, "Temporary Seeding", shall be paid at the contract unit price of $2,800.00
Bid Item #127, "Medium Compost", shall be paid at the contract unit price of $17,000.00
Bid Item #136, "Beam Guardrail Type 31 – 9 FT Long Post", shall be paid at the contract unit price of $37.00
Bid Item #137, "Beam Guardrail Non-Flared Terminal", shall be paid at the contract unit price of $3,800.00

Payment for the following New items shall be as follows:

New Bid Item #178 – "Underdrain Pipe 12in. Diam.", shall be paid at the negotiated unit price of $37.22 per linear foot.
New Bid Item #179 – "Construction Geotextile for Underground Drainage", shall be paid at the negotiated unit price of $4.71 per square yard.
New Bid Item #180 – "Sand Drainage Blanket for CAVFS", shall be paid at the negotiated unit price of $71.91 per cubic yard.
New Bid Item #181 – "Temporary Seeding Equitable Adjustment", shall be paid at the agreed lump sum of $763.79.
New Bid Item #182 – "Guardrail Equitable Adjustment", shall be paid at the agreed lump sum of $1,016.96.

Condition of Award
In accordance with Section 1-07.11 of the Special Provisions, page 52 lines 5 – 8, *"Owner Initiated Changes - In instances where the Engineer makes changes to Work that was committed to a COA DBE the Contractor may be directed to substitute for the Work."* This Change Order confirms the original Contract DBE Commitment of $1,920,377.93 and reallocates the COA Commitment for each of the DBE subcontractors, as shown in the third table below. Bella Terra's commitment is increased by $4,604.00. Dirt and Aggregate Interchange Inc.'s commitment is reduced by $4,604.00. This change order maintains the original commitment of $1,920,377.93 by increasing the dollar amounts to Bella Terra.

The table below shows how the quantity changes affect the actual COA Subcontract pricing for Bella Terra:

Bid Item No.	Description	Unit Price	Original Qty	Original Contract Value	Revised Qty	Revised Contract Value	Add/Deduct Value Applied Towards COA
89	Temporary Seeding	$3,920.40 per Acre*	6.00 Acres	$23,522.40	6.42 Acres	$25,168.97	$1,646.57
NEW	Temporary Seeding Equitable Adjustment	$211.39**	n/a	n/a	1 L.S.	$211.39	$211.39
			Totals	**$16,800**		**$25,380.36**	**$1,857.96**

*Subcontract unit price, which exceeds Contract unit bid price

** Bella Terra's portion of the LS Equitable Adjustment

As shown in Dirt and Aggregate Interchange, Inc.'s subcontract, the COA prices on the affected items are higher than Goodfellow Brothers' bid prices. The table below shows how the quantity changes affect the actual COA Subcontract pricing:

Bid Item No.	Description	Unit Price	Original Qty	Original Contract Value	Revised Qty	Revised Contract Value	Add/Deduct Value Applied Towards COA
136	Beam Guardrail Type 31 – 9 ft Post	$54.00 per LF*	565 LF	$30,510.00	839 LF	$45,306.00	$14,796.00
137	Beam Guardrail Type 31 – Non-Flared Terminal	$4,850.00 Each*	13	$63,050.00	9	$43,650.00	($19,400.00)
			Totals	**$93,560.00**	**n/a**	**$88,956.00**	**($4,604.00)**

*Subcontract unit price, which exceeds Contract unit bid price

Name of DBE and Certificate Number	Project Role / Description of Work	Original Dollar Value Applied Towards Goal	Revised Subcontract - See CO#4	Available COA Balance from Subcontract Increase after CO#4	CO #5 Item Reduction or Increase	Transfer from Available COA Balance after CO#4	Revised / Current Dollar Value Applied Towards Goal	Available Balance from Subcontract Increase after CO#5
Bella Terra LLC D2F0023991	Subcontractor/ Landscaping	$316,383.48	$328,579.54	$3,168.08	$1,857.96	$2,746.04	$320,987.48	$422.04
The Bag Lady, Inc. D2F0016394	Subcontractor/ Erosion Control	$721,832.00	$743,494.32	$17,209.82	n/a	n/a	$721,832.00	$17,209.82
Perez Rebar, LLC D5F0026386	Subcontractor / Rebar Installer	$557,762.45	No Change	n/a	n/a	n/a	$557,762.45	
Dirt and Aggregate Interchange, Inc D4M0000781	Subcontractor / Guardrail Installer	$324,400.00	No Change	n/a	**($4,604.00)**	n/a	$319,796.00	
	Subcontractor DBE Total	**$1,920,377.93**	**$1,954,236.31**	**$20,377.90**	**($2,746.04)**	**$2,746.04**	**$1,920,377.93**	**$17,631.86**
	Project DBE Total	**$1,920,377.93**					**$1,920,377.93**	

Contract Time

This Change Order adds 9 working days to the Contract.

Copyright © WSP USA Inc. All Rights Reserved.

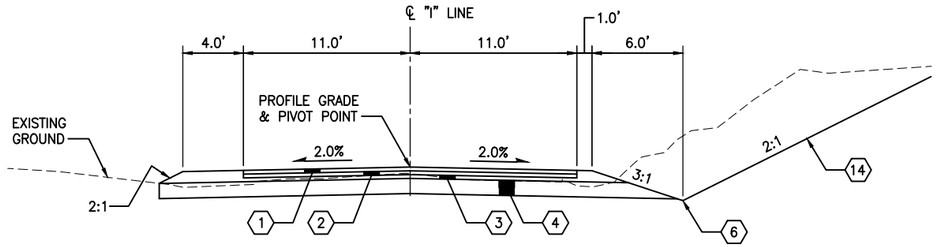

ROADWAY SECTION A

SCALE: 1"=5'

STA 9+50.00 TO STA 10+75.00

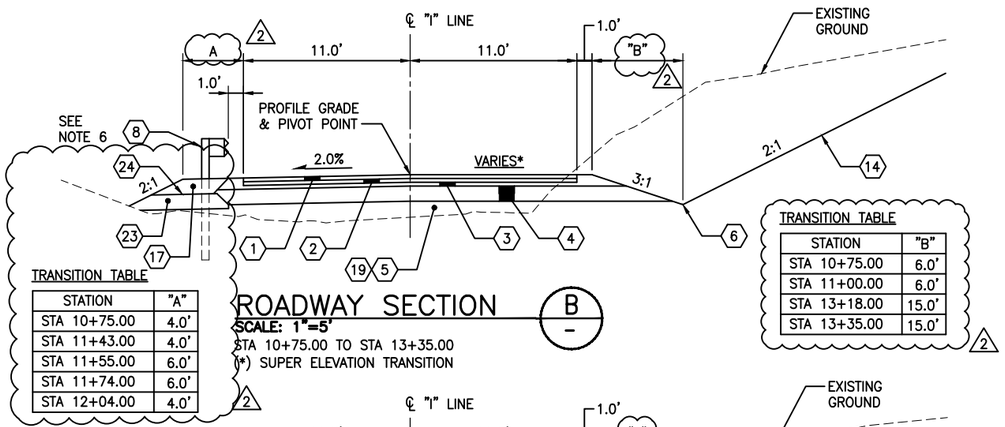

TRANSITION TABLE

STATION	"A"
STA 10+75.00	4.0'
STA 11+43.00	4.0'
STA 11+55.00	6.0'
STA 11+74.00	6.0'
STA 12+04.00	4.0'

2

ROADWAY SECTION B

SCALE: 1"=5'

STA 10+75.00 TO STA 13+35.00

(*) SUPER ELEVATION TRANSITION

TRANSITION TABLE

STATION	"B"
STA 10+75.00	6.0'
STA 11+00.00	6.0'
STA 13+18.00	15.0'
STA 13+35.00	15.0'

2

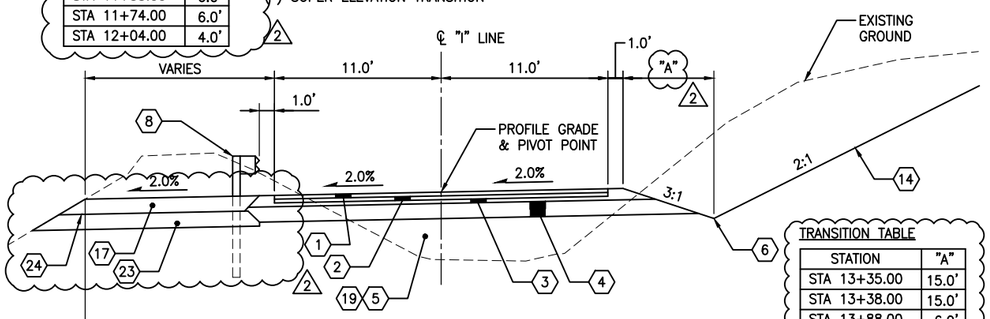

TRANSITION TABLE

STATION	"A"
STA 13+35.00	15.0'
STA 13+38.00	15.0'
STA 13+88.00	6.0'
STA 14+25.00	6.0'

2

ROADWAY SECTION C

SCALE: 1"=5'

STA 13+35.00 TO STA 14+25.00

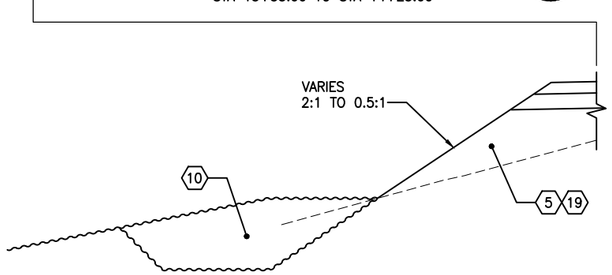

(STA 12+60 TO STA 17+35)

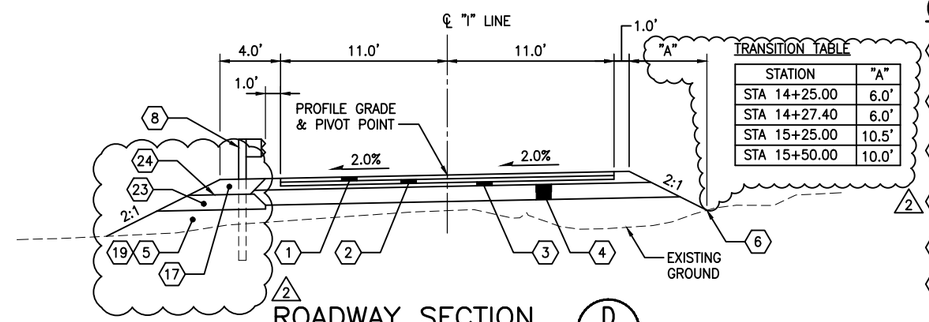

TRANSITION TABLE

STATION	"A"
STA 14+25.00	6.0'
STA 14+27.40	6.0'
STA 15+25.00	10.5'
STA 15+50.00	10.0'

2

ROADWAY SECTION D

SCALE: 1"=5'

STA 14+25.00 TO STA 15+50.00

TRANSITION TABLE

STATION	"A"
STA 15+50.00	4.0'
STA 15+60.00	6.0'
STA 20+00.00	6.0'
STA 20+20.00	4.0'

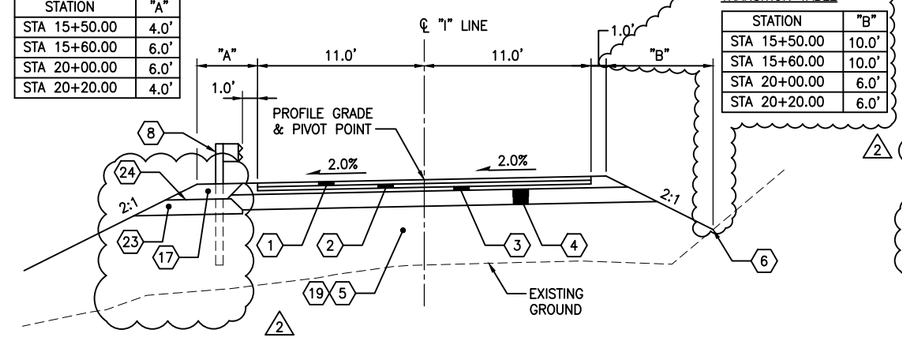

TRANSITION TABLE

STATION	"B"
STA 15+50.00	10.0'
STA 15+60.00	10.0'
STA 20+00.00	6.0'
STA 20+20.00	6.0'

2

ROADWAY SECTION E

SCALE: 1"=5'

STA 15+50.00 TO STA 15+60.00

STA 20+00.00 TO STA 20+20.00

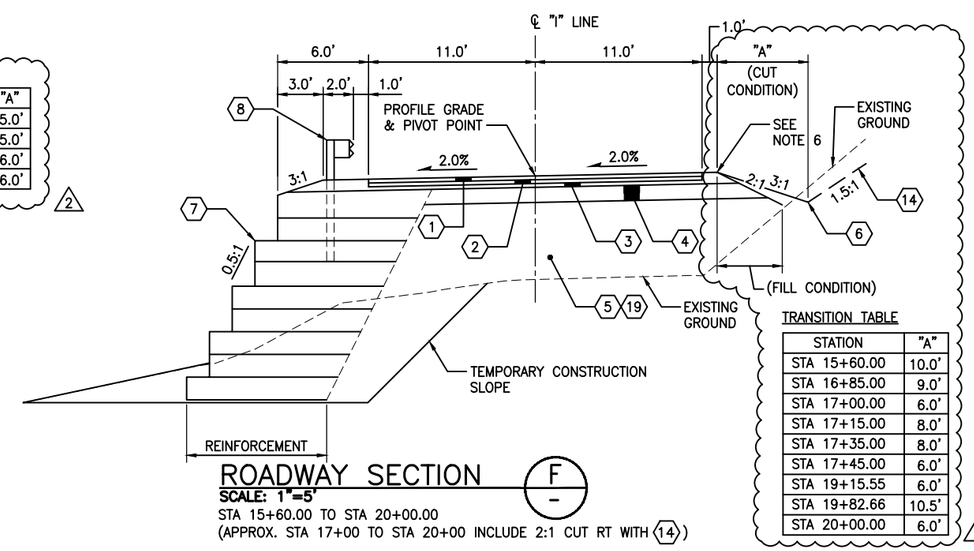

TRANSITION TABLE

STATION	"A"
STA 15+60.00	10.0'
STA 16+85.00	9.0'
STA 17+00.00	6.0'
STA 17+15.00	8.0'
STA 17+35.00	8.0'
STA 17+45.00	6.0'
STA 19+15.55	6.0'
STA 19+82.66	10.5'
STA 20+00.00	6.0'

2

ROADWAY SECTION F

SCALE: 1"=5'

STA 15+60.00 TO STA 20+00.00

(APPROX. STA 17+00 TO STA 20+00 INCLUDE 2:1 CUT RT WITH (14))

CONSTRUCTION NOTES

1. HMA CL 1/2 IN PG 58H-22
   0.25' COMPACTED DEPTH – WEARING COURSE
2. HMA CL 1/2 IN PG 58H-22
   0.25' COMPACTED DEPTH – LEVELING COURSE
3. CRUSHED SURFACING BASE COURSE
   0.50' COMPACTED DEPTH
4. RAILROAD BALLAST PER SPEC. SECTION 4-04.2
   0.75' COMPACTED DEPTH
5. EARTH EMBANKMENT FILL (SEE GENERAL NOTES 3 & 4)
6. ROCK LINED DITCH
   SEE SHEET TS05 FOR DETAIL
7. GEOSYNTHETIC REINFORCED SLOPE WALL
   SEE SHEET WS01 FOR DETAILS
8. BEAM GUARDRAIL TYPE 31
   PER WSDOT STD PLAN C-20.10
10. EROSION PROTECTION SEE EP SHEETS FOR DETAILS
14. SEE MITIGATION/ PLANTING PLAN (SHEETS MP01-MP06)
17. 1.0' TOP SOIL TYPE A (CAVFS) WITH SEEDING
    SEE SHEET TS06 FOR DETAIL
18. NOTE NOT USED
19. EMBANKMENT COMPACTION – EARTH
23. 1.0' THICK LAYER OF SAND DRAINAGE BLANKET.
24. LOW SURVIVABILITY, NON-WOVEN, CLASS B GEOTEXTILE FOR UNDERGROUND DRAINAGE PER SP HF9-33.2(1).DT9.

2

GENERAL NOTES

1. SEE SHEET SV04 FOR "I" LINE SUPER ELEVATION DIAGRAM.
2. SEE SHEET TS04 FOR ROCK CUT SLOPE DETAILS.
3. SEE SHEET TS04 FOR EMBANKMENT FILL DETAILS.
4. SEE SPECIAL PROVISION 'EMBANKMENT CONSTRUCTION'
5. FOR PLANTING AND PLANTING PREPARATION DETAILS, SEE MP AND MS SHEETS.
6. SEE PLAN SHEETS FOR GUARDRAIL STATIONING, TRANSITIONS, AND LIMITS.

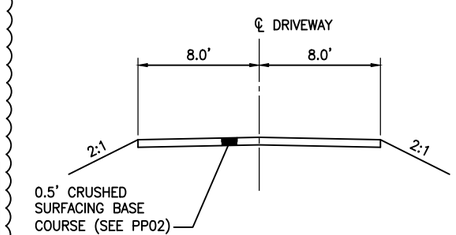

GRAVEL DRIVEWAY SECTION

SCALE: 1"=5'

NEAR STA 10+10.00 (LEFT SIDE)

PLAN CHECK	BY	DATE
PRINTED	--	12/16/20

CHANGE ORDER #5
2/11/2022
Page 4 of 15

DATE	NO.	REVISION	BY	
6/18/21	2	REVISION 4	KG	ST
1/22/21	1	ADDENDUM 3	KG	ST

Last Saved by: USKG675404 on: Jun 18, 2021 3:39 PM

REGION NO.	STATE	FED. AID PROJ. NO.	SURVEY NO.
10	WASH.	ER-0701(063)	4178

DESIGNED BY: JCR | DRAWN BY: JCR

FIELD BOOK(S): | UPI# 06-0150

WSP USA Inc.
33301 9th Avenue South
Suite 300
Federal Way, WA 98003-2600
TEL: (206) 431-2300
FAX: (206) 431-2250

STATE OF WASHINGTON STUART C. BENNION 41778 STRUCTURAL ENGINEER PROFESSIONAL ENGINEER
6/18/2021

APPROVED FOR CONSTRUCTION

DOUGLAS W. McCORMICK, P.E.
SNOHOMISH COUNTY ENGINEER

DATE APPROVED:

SNOHOMISH COUNTY DEPARTMENT OF PUBLIC WORKS

FUNDING NO. RC1532

INDEX-GALENA ROAD
FLOOD REPAIR MP 6.4-6.9

ROADWAY & GRADING SECTIONS – SHEET 1

REFERENCE SHEET NO. TS01

SHEET 63 OF 222 SHEETS

Last Saved by: USKG675404 on: Jun 18, 2021 3:39 PM File: C:\Users\USKG675404\WSP O365\Civil-FederalWay - Projects\A14.0072\CADD\Dwgs\06_TS01.dwg

Copyright © WSP USA Inc. All Rights Reserved.

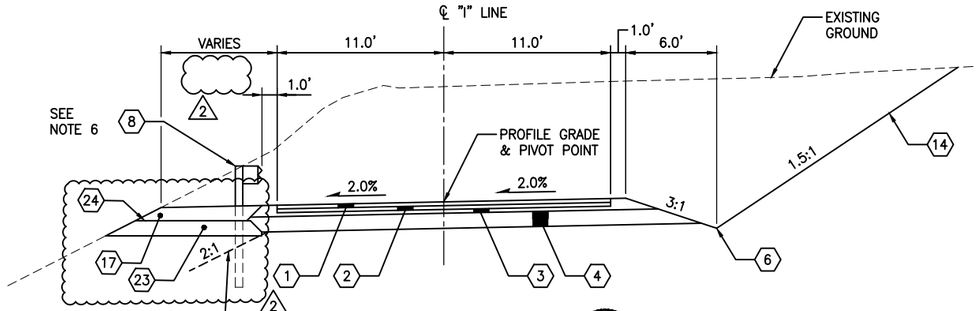

ROADWAY SECTION G

SCALE: 1"=5'

STA 20+20.00 TO STA 23+95.00

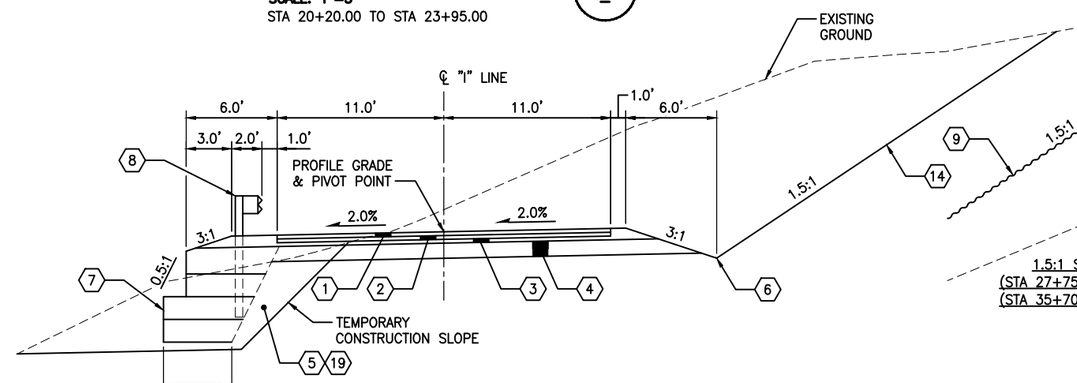

ROADWAY SECTION H

SCALE: 1"=5'

STA 23+95.00 TO STA 26+05.00

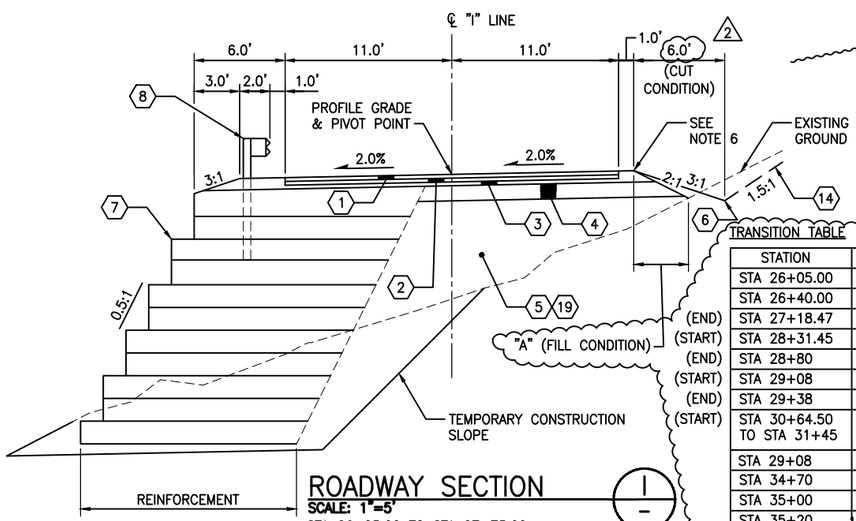

TRANSITION TABLE

STATION	"A"
STA 26+05.00	4.0'
STA 26+40.00	6.0'
STA 27+18.47	4.0'
STA 28+31.45	6.0'
STA 28+80	4.0'
STA 29+08	6.0'
STA 29+38	6.0'
STA 30+64.50 TO STA 31+45	VARIES 8.0' TO 13.5'
STA 29+08	6.0'
STA 34+70	6.0'
STA 35+00	13.5'
STA 35+20	12.75'
STA 35+70	15.5'

(END)
(START)
(END)
(START)
(END)
(START)

ROADWAY SECTION I

SCALE: 1"=5'

STA 26+05.00 TO STA 27+75.00
STA 30+05.00 TO STA 35+70.00

TRANSITION TABLE

STATION	"A"
STA 38+25.00	1.0'
STA 38+31.00	4.0'
STA 38+61.00	6.0'
STA 38+80.00	6.0'
STA 39+10.00	1.0'

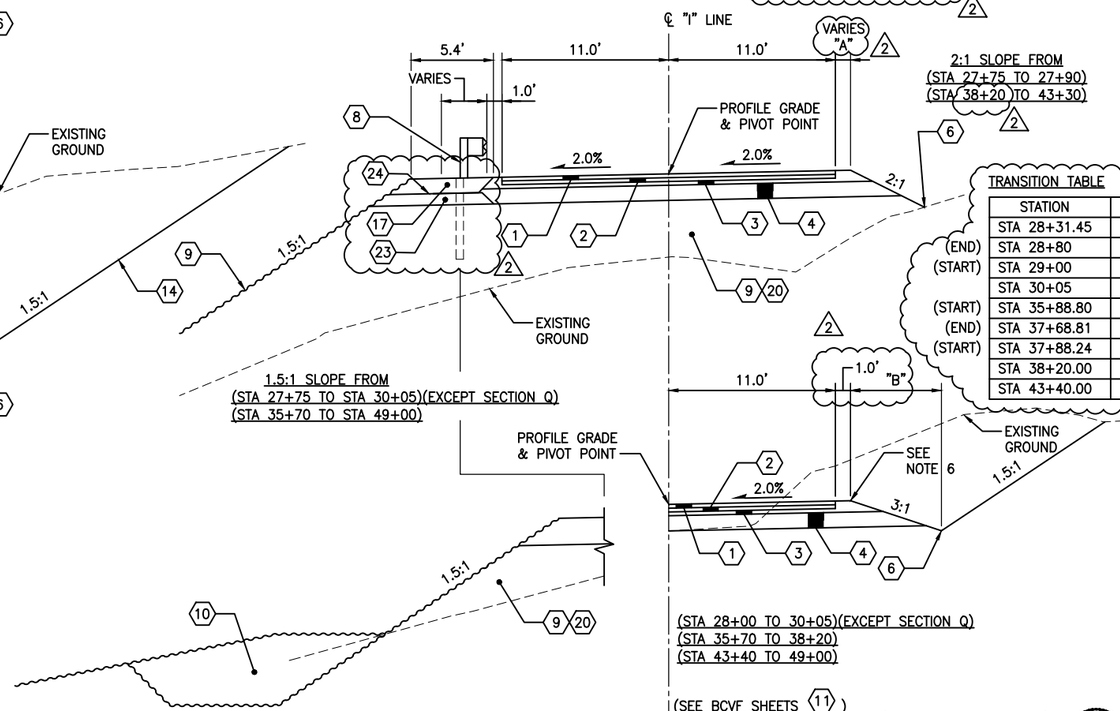

TRANSITION TABLE

STATION	"B"
STA 28+31.45	6.0'
STA 28+80	8.5'
STA 29+00	6.0'
STA 30+05	6.0'
STA 35+88.80	8.0'
STA 37+68.81	8.0'
STA 37+88.24	8.0'
STA 38+20.00	6.0'
STA 43+40.00	6.0'

(END)
(START)
(START)
(END)
(START)

(SEE BCVF SHEETS 11)

BCVF SECTION (NOT SHOWN) Q

SCALE:

STA 28+18.00 TO STA 29+68.00

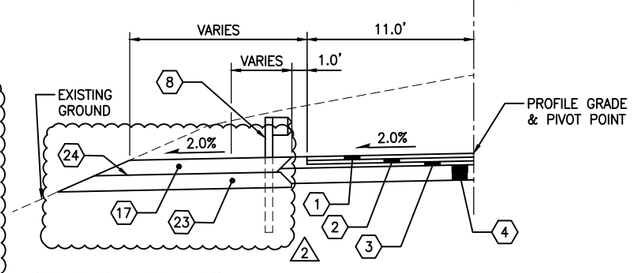

(STA 45+30 TO STA 46+40)
(STA 46+70 TO STA 47+35)

ROADWAY SECTION J

SCALE: 1"=5'

STA 27+75.00 TO STA 30+05.00
STA 35+70.00 TO STA 49+00.00

CONSTRUCTION NOTES

1. HMA CL 1/2 IN PG 58H-22 0.25' COMPACTED DEPTH – WEARING COURSE
2. HMA CL 1/2 IN PG 58H-22 0.25' COMPACTED DEPTH – LEVELING COURSE
3. CRUSHED SURFACING BASE COURSE 0.50' COMPACTED DEPTH
4. RAILROAD BALLAST PER SPEC. SECTION 4-04.2 0.75' COMPACTED DEPTH
5. EARTH EMBANKMENT FILL (SEE GENERAL NOTES 3 & 4).
6. ROCK LINED DITCH SEE SHEET TS05 FOR DETAIL
7. GEOSYNTHETIC REINFORCED SLOPE WALL SEE SHEET WS04 AND WS05 FOR DETAILS
8. BEAM GUARDRAIL TYPE 31 PER WSDOT STD PLAN C-20.10
9. ROCK EMBANKMENT FILL (SEE GENERAL NOTES 3 & 4).
10. EROSION PROTECTION SEE EP SHEETS FOR DETAILS
11. BOX CULVERT VENTED FORD SEE VF SHEETS FOR DETAILS
14. SEE MITIGATION/ PLANTING PLAN (SHEETS MP01-MP06)
17. 1.0' TOP SOIL TYPE A (CAVFS) WITH SEEDING SEE SHEET TS06 FOR DETAIL
18. NOTE NOT USED
19. EMBANKMENT COMPACTION – EARTH
20. EMBANKMENT COMPACTION – ROCK
23. 1.0' THICK LAYER OF SAND DRAINAGE BLANKET.
24. LOW SURVIVABILITY, NON-WOVEN, CLASS B GEOTEXTILE FOR UNDERGROUND DRAINAGE PER SP HF9-33.2(1).DT9.

GENERAL NOTES

1. SEE SHEET SV04 FOR "I" LINE SUPER ELEVATION DIAGRAM.
2. SEE SHEET TS04 FOR ROCK CUT SLOPE DETAILS.
3. SEE SHEET TS04 FOR EMBANKMENT FILL DETAILS.
4. SEE SPECIAL PROVISION 'EMBANKMENT CONSTRUCTION'
5. FOR PLANTING AND PLANTING PREPARATION DETAILS, SEE MP AND MS SHEETS
6. SEE SHEET TS05 FOR RIGHT GUARDRAIL IN VICINITY OF CULVERT CONCRETE HEADWALLS
7. SEE PLAN SHEETS FOR GUARDRAIL STATIONING, TRANSITIONS, AND LIMITS.

PLAN CHECK	BY	DATE
PRINTED	--	12/16/20

CHANGE ORDER #5
2/11/2022
Page 5 of 15

DATE	NO.	REVISION	BY	
6/18/21	2	REVISION 4	KG	ST
1/22/21	1	ADDENDUM 3	KG	ST

Last Saved by: USKG675404 on: Jun 18, 2021 4:14 PM

REGION NO.	STATE	FED. AID PROJ. NO.	SURVEY NO.
10	WASH.	ER-0701(063)	4178

DESIGNED BY: JCR
DRAWN BY: JCR
FIELD BOOK(S):
UPI# 06-0150

WSP USA Inc.
33301 9th Avenue South
Suite 300
Federal Way, WA 98003-2600
TEL: (206) 431-2300
FAX: (206) 431-2250

STUART C. BENNYON, STATE OF WASHINGTON, 41778, STRUCTURAL ENGINEER, PROFESSIONAL ENGINEER
6/18/2021

APPROVED FOR CONSTRUCTION
DOUGLAS W. McCORMICK, P.E.
SNOHOMISH COUNTY ENGINEER
DATE APPROVED:

SNOHOMISH COUNTY DEPARTMENT OF PUBLIC WORKS
FUNDING NO. RC1532

INDEX-GALENA ROAD
FLOOD REPAIR MP 6.4-6.9
ROADWAY & GRADING SECTIONS – SHEET 2

REFERENCE SHEET NO. TS02
SHEET 64 OF 222 SHEETS

Last Saved by: USKG675404 on: Jun 18, 2021 4:14 PM File: C:\Users\USKG675404\WSP O365\Civil-FederalWay - Projects\A14.0072\CADD\Dwgs\06_TS02.dwg

Copyright © WSP USA Inc. All Rights Reserved.

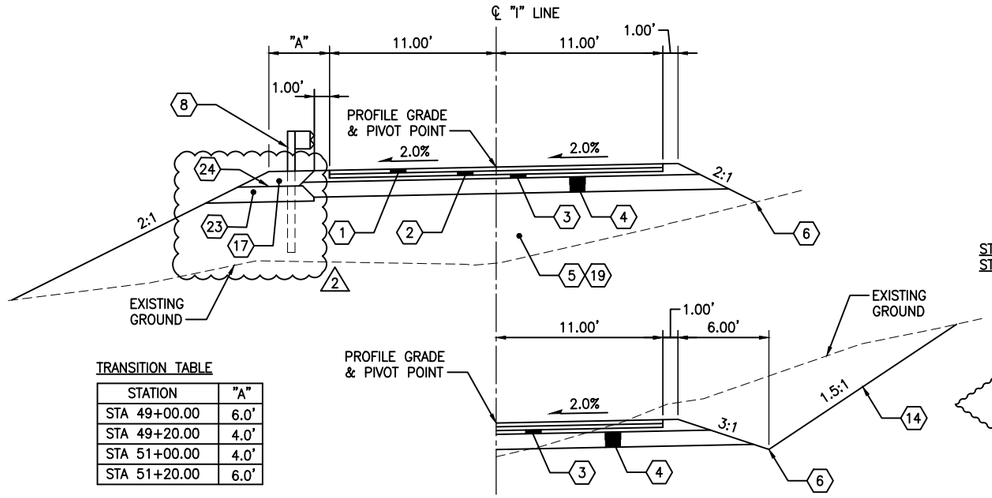

TRANSITION TABLE

STATION	"A"
STA 49+00.00	6.0'
STA 49+20.00	4.0'
STA 51+00.00	4.0'
STA 51+20.00	6.0'

ROADWAY SECTION K
SCALE: 1"=5'
STA 49+00.00 TO STA 51+20.00

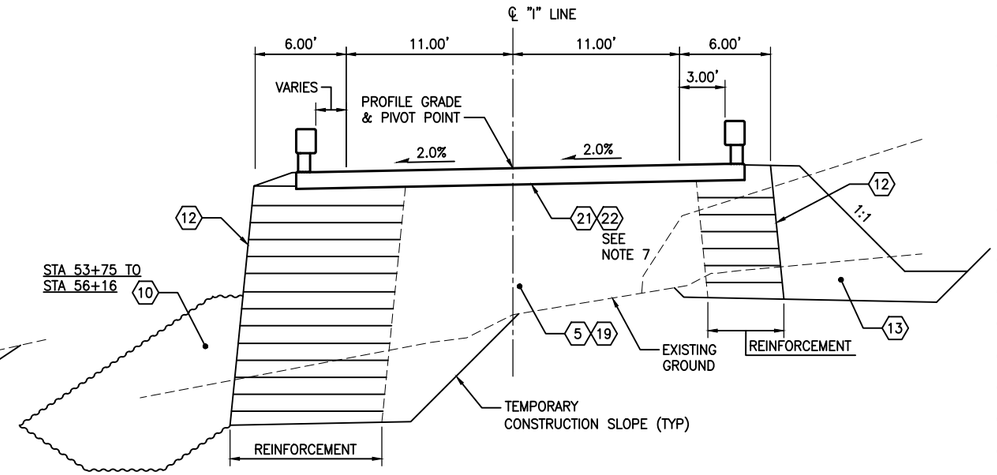

ROADWAY SECTION M
SCALE: 1"=5'
STA 53+75.00 TO STA 54+17.70
STA 56+03.70 TO STA 56+25.00

(SEE BRIDGE SHEETS 15)

BRIDGE SECTION N
SCALE:
STA 54+17.70 TO STA 56+03.70

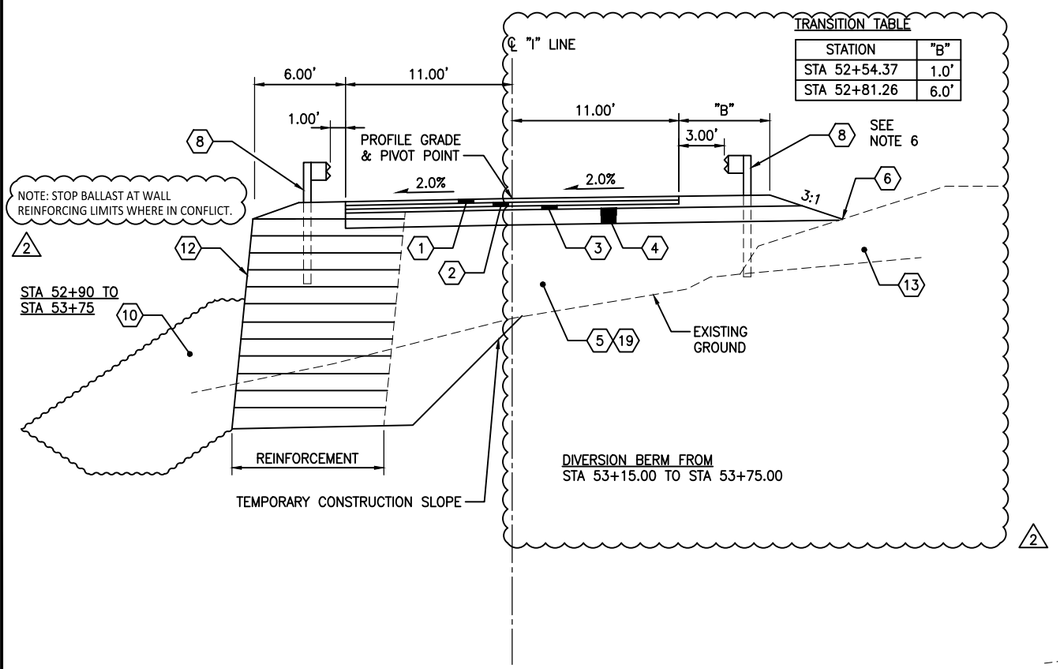

TRANSITION TABLE

STATION	"B"
STA 52+54.37	1.0'
STA 52+81.26	6.0'

DIVERSION BERM FROM
STA 53+15.00 TO STA 53+75.00

ROADWAY SECTION L
SCALE: 1"=5'
STA 51+20.00 TO STA 53+75.00

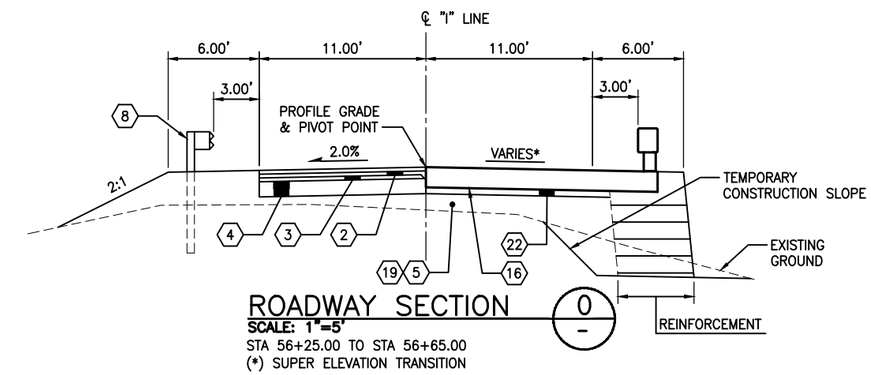

ROADWAY SECTION O
SCALE: 1"=5'
STA 56+25.00 TO STA 56+65.00
(*) SUPER ELEVATION TRANSITION

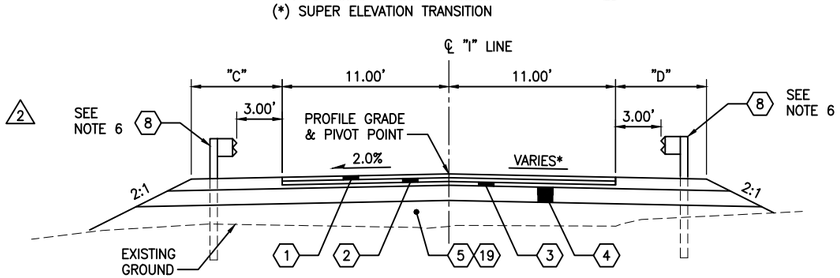

ROADWAY SECTION P
SCALE: 1"=5'
STA 56+65.00 TO STA 60+01.69
(*) SUPER ELEVATION TRANSITION

CONSTRUCTION NOTES

1. HMA CL 1/2 IN PG 58H-22 0.25' COMPACTED DEPTH – WEARING COURSE
2. HMA CL 1/2 IN PG 58H-22 0.25' COMPACTED DEPTH – LEVELING COURSE
3. CRUSHED SURFACING BASE COURSE 0.50' COMPACTED DEPTH
4. RAILROAD BALLAST PER SPEC. SECTION 4-04.2 0.75' COMPACTED DEPTH
5. EARTH EMBANKMENT FILL (SEE GENERAL NOTES 3 & 4).
6. ROCK LINED DITCH SEE SHEET TS05 FOR DETAIL
8. BEAM GUARDRAIL TYPE 31 PER WSDOT STD PLAN C-20.10
10. EROSION PROTECTION SEE EP SHEETS FOR DETAILS
12. STRUCTURAL EARTH WALL SEE WP SHEETS FOR DETAILS
13. DIVERSION BERM SEE DB SHEETS FOR DETAILS
14. SEE MITIGATION/ PLANTING PLAN (SHEETS MP01-MP06)
15. BRIDGE SEE BR SHEETS FOR DETAILS
16. SEW TRAFFIC BARRIER. SEE WP SHEETS FOR DETAILS.
17. 1.0' TOP SOIL TYPE A (CAVFS) WITH SEEDING SEE SHEET TS06 FOR DETAIL
19. EMBANKMENT COMPACTION – EARTH
21. BRIDGE APPROACH SLAB. SEE BR SHEETS FOR DETAILS.
22. CRUSHED SURFACING BASE COURSE MIN. 0.25' COMPACTED DEPTH
23. 1.0' THICK LAYER OF SAND DRAINAGE BLANKET.
24. LOW SURVIVABILITY, NON-WOVEN, CLASS B GEOTEXTILE FOR UNDERGROUND DRAINAGE PER SP HF9-33.2(1).DT9.

2

GENERAL NOTES

1. SEE SHEET SV04 FOR "I" LINE SUPER ELEVATION DIAGRAM.
2. SEE SHEET TS04 FOR ROCK CUT SLOPE DETAILS.
3. SEE SHEET TS04 FOR EMBANKMENT FILL DETAILS.
4. SEE SPECIAL PROVISION 'EMBANKMENT CONSTRUCTION'
5. FOR PLANTING AND PLANTING PREPARATION DETAILS, SEE MP AND MS SHEETS.
6. SEE PLAN SHEETS FOR GUARDRAIL STATIONING, TRANSITIONS, AND LIMITS.
7. CSBC IS INCIDENTAL TO APPROACH SLAB

TRANSITION TABLE

STATION	"C"
STA 56+65.00	6.0'
STA 56+70.00	6.0'
STA 56+90.00	4.0'

2

TRANSITION TABLE

STATION	"D"
STA 56+65	6.0'
STA 57+59.53	6.0'
STA 57+77.84	1.0'

2

PLAN CHECK	BY	DATE					
PRINTED	--	12/16/20					
			6/18/21	2	REVISION 4	KG	ST
			1/22/21	1	ADDENDUM 3	KG	ST
			DATE	NO.	REVISION	BY	

CHANGE ORDER #5
2/11/2022
Page 6 of 15

Last Saved by: USKG675404 on: Jun 18, 2021 3:39 PM

REGION NO.	STATE	FED. AID PROJ. NO.	SURVEY NO.
10	WASH.	ER-0701(063)	4178

DESIGNED BY: JCR
DRAWN BY: JCR
FIELD BOOK(S):
UPI# 06-0150

WSP USA Inc.
33301 9th Avenue South
Suite 300
Federal Way, WA 98003-2600
TEL: (206) 431-2300
FAX: (206) 431-2250

STUART C. BENNION
STATE OF WASHINGTON
4178
STRUCTURAL ENGINEER
PROFESSIONAL ENGINEER
6/18/2021

APPROVED FOR CONSTRUCTION

DOUGLAS W. McCORMICK, P.E.
SNOHOMISH COUNTY ENGINEER

DATE APPROVED:

SNOHOMISH COUNTY
DEPARTMENT OF
PUBLIC WORKS

FUNDING NO. RC1532

INDEX-GALENA ROAD
FLOOD REPAIR MP 6.4-6.9

ROADWAY & GRADING
SECTIONS – SHEET 3

REFERENCE SHEET NO. TS03

SHEET 65 OF 222 SHEETS

Last Saved by: USKG675404 on: Jun 18, 2021 3:39 PM File: C:\Users\USKG675404\WSP O365\Civil-FederalWay - Projects\A14.0072\CADD\Dwgs\06_TS03.dwg

Copyright © WSP USA Inc. All Rights Reserved.

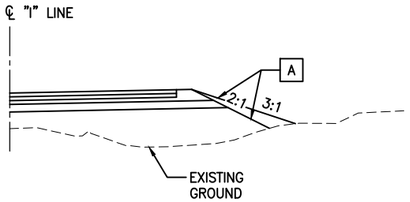

RIGHT GRADING SECTION "A"
SCALE: 1"=5'

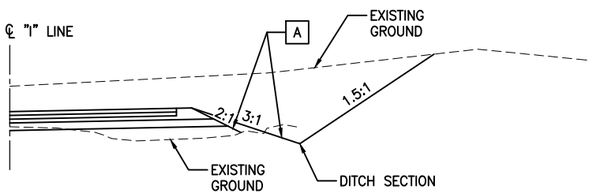

RIGHT GRADING SECTION "B"
SCALE: 1"=5'

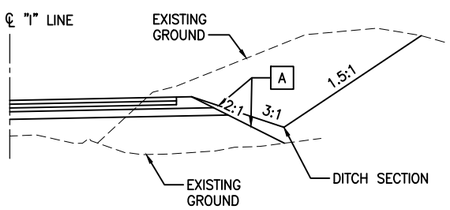

RIGHT GRADING SECTION "C"
SCALE: 1"=5'

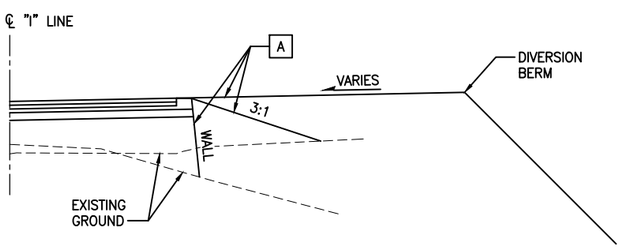

RIGHT GRADING SECTION "D"
SCALE: 1"=5'

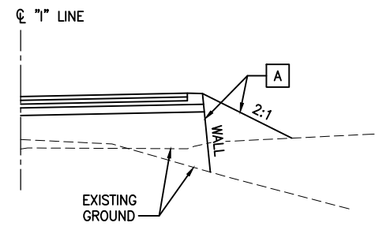

RIGHT GRADING SECTION "E"
SCALE: 1"=5'

RIGHT GRADING TRANSITION TABLE

STATION TO STATION	A	SECTION
STA "I" 14+25.00 TO STA "I" 14+40.00	3:1 to 2:1	"A"
STA "I" 17+00.00 TO STA "I" 17+20.00	2:1 TO DITCH	"B"
STA "I" 19+00.00 TO STA "I" 19+20.00	DITCH TO 2:1	"C"
STA "I" 20+00.00 TO STA "I" 20+20.00	2:1 TO DITCH	"C"
STA "I" 26+00.00 TO STA "I" 26+20.00	DITCH TO 2:1	"C"
STA "I" 27+90.00 TO STA "I" 28+00.00	2:1 TO DITCH	"C"
STA "I" 30+30.00 TO STA "I" 30+40.00	DITCH TO 2:1	"C"
STA "I" 31+95.00 TO STA "I" 32+05.00	2:1 TO DITCH	"C"
STA "I" 34+70.00 TO STA "I" 34+80.00	DITCH TO 2:1	"C"
STA "I" 35+35.00 TO STA "I" 35+45.00	2:1 TO DITCH	"C"
STA "I" 38+20.00 TO STA "I" 38+30.00	DITCH TO 2:1	"C"
STA "I" 43+30.00 TO STA "I" 43+40.00	2:1 TO DITCH	"C"
STA "I" 49+55.00 TO STA "I" 49+65.00	DITCH TO 2:1	"C"
STA "I" 51+70.00 TO STA "I" 51+80.00	2:1 TO DITCH	"C"
STA "I" 52+20.00 TO STA "I" 52+30.00	DITCH TO 3:1	"C"
STA "I" 53+20.00 TO STA "I" 53+50.00	DITCH TO DIVERSION BERM	"D"
STA "I" 53+75.00 TO STA "I" 53+78.00	DIVERSION BERM TO WALL	"D"
STA "I" 56+65.00 TO STA "I" 56+75.00	WALL TO 2:1	"E"

SEE CONSTRUCTION NOTES ON SHEETS TS01 TO TS03
AND ROADWAY SECTIONS FOR DETAILS NOT SHOWN

GRADING NOTES

A INDICATES SLOPE TRANSITION

GENERAL NOTES

1. FOR ROAD APPROACH LOCATION, SEE PP SHEETS.
2. FOR WALL LOCATIONS, SEE PP SHEETS.
3. SEE WALL/SLOPE INTERFACE DETAIL ON SHEET TS06.
4. FOR PLANTING AND PLANTING PREPARATION DETAILS, SEE MP AND MS SHEETS.
5. SEE PLAN SHEETS FOR GUARDRAIL STATIONING, TRANSITIONS, AND LIMITS.
6. HAND PLACED RIPRAP TO BE LOCATED AT BOTH INLET AND OUTLET OF THE UNDERDRAIN PIPE SYSTEM.
7. FOR ADDITIONAL GUARDRAIL DETAILS SEE CP AND VF SHEETS.

2

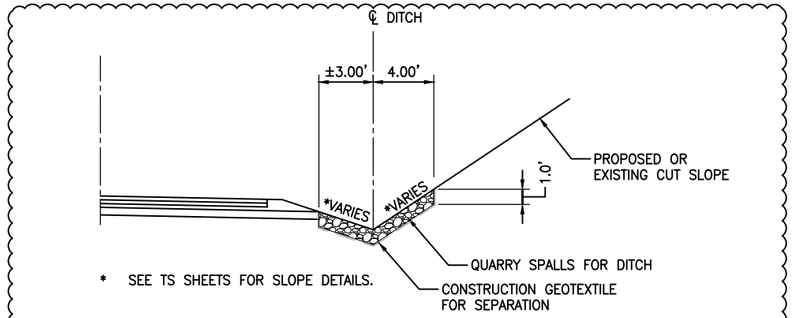

* SEE TS SHEETS FOR SLOPE DETAILS.

ROCK LINED DITCH SECTION (A / –)
SCALE: NTS
STA 9+50.00 TO STA 53+20

2

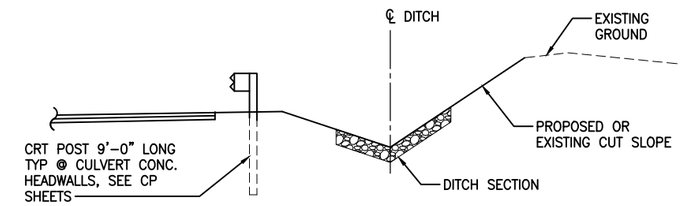

RIGHT GUARDRAIL SECTION (B / –)
SCALE: NTS
ALL RT GUARDRAIL POSTS 9'-0" LONG:
STA 28+15 TO STA 29+68
STA 33+08 TO STA 38+68
STA 45+03 TO STA 47+69 2
SEE NOTE 5
SEE NOTE 7 2

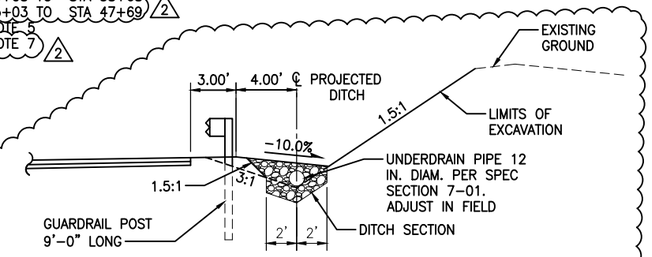

RIGHT GUARDRAIL SECTION (C / –)
SCALE: NTS
ALL RT GUARDRAIL POSTS 9'-0" LONG:
STA 27+86 TO STA 28+15
STA 29+68 TO STA 30+29
STA 32+23 TO STA 33+08
STA 44+18 TO STA 45+03
STA 47+69 TO STA 48+54
SEE NOTE 5

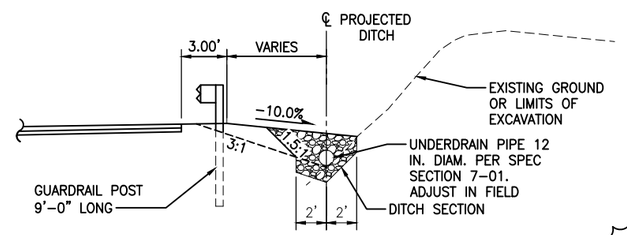

RIGHT GUARDRAIL SECTION (D / –)
SCALE: NTS
ALL RT GUARDRAIL POSTS 9'-0" LONG:
STA 27+29 TO STA 27+87
STA 30+29 TO STA 30+57
SEE NOTE 5

2

PLAN CHECK	BY	DATE
PRINTED	--	12/16/20

CHANGE ORDER #5
2/11/2022
Page 7 of 15

DATE	NO.	REVISION	BY	
6/18/21	2	REVISION 4	KG	ST
1/22/21	1	ADDENDUM 3	KG	ST

Last Saved by: USKG675404 on: Jun 18, 2021 3:39 PM

REGION NO.	STATE	FED. AID PROJ. NO.	SURVEY NO.
10	WASH.	ER-0701(063)	4178

DESIGNED BY: JCR
DRAWN BY: JCR
FIELD BOOK(S):
UPI# 06-0150

WSP USA Inc.
33301 9th Avenue South
Suite 300
Federal Way, WA 98003-2600
TEL: (206) 431-2300
FAX: (206) 431-2250

STUART C. BENNION — STATE OF WASHINGTON — 41778 — PROFESSIONAL ENGINEER
6/18/2021

APPROVED FOR CONSTRUCTION
DOUGLAS W. McCORMICK, P.E.
SNOHOMISH COUNTY ENGINEER
DATE APPROVED:

SNOHOMISH COUNTY DEPARTMENT OF PUBLIC WORKS
FUNDING NO. RC1532

INDEX-GALENA ROAD
FLOOD REPAIR MP 6.4-6.9
ROADWAY & GRADING SECTIONS - SHEET 5

REFERENCE SHEET NO. TS05
SHEET 67 OF 222 SHEETS

Last Saved by: USKG675404 on: Jun 18, 2021 3:39 PM File: C:\Users\USKG675404\WSP O365\Civil-FederalWay - Projects\A14.0072\CADD\Dwgs\06_TS05.dwg

Copyright © WSP USA Inc. All Rights Reserved.

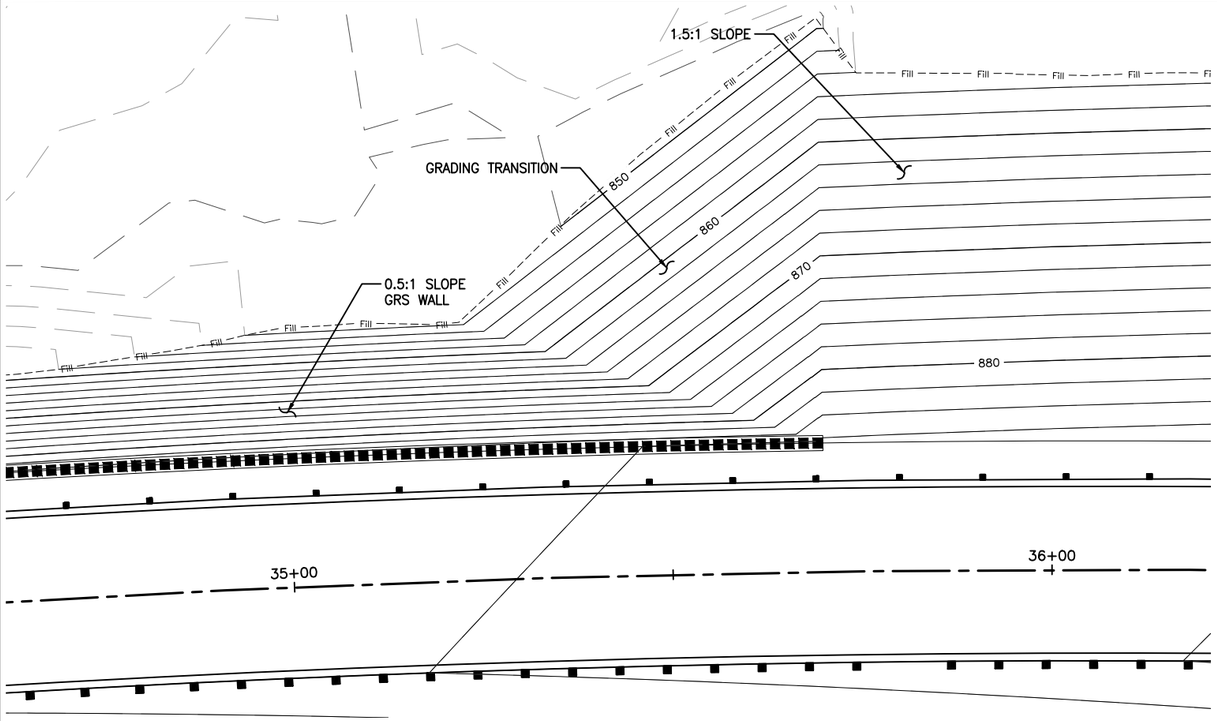

TYPICAL GRADING FOR WALL TO 1.5:1 SLOPE TRANSITION

SCALE: 1"=10'

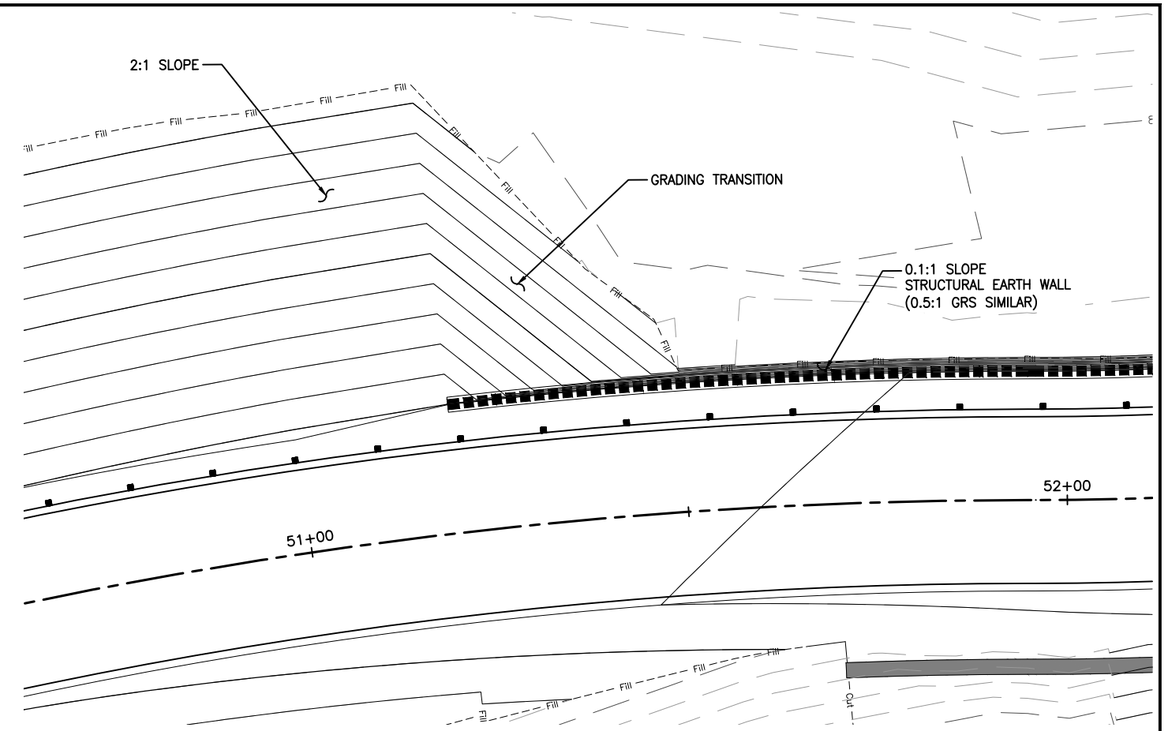

TYPICAL GRADING FOR 2:1 SLOPE TO WALL TRANSITION

SCALE: 1"=10'

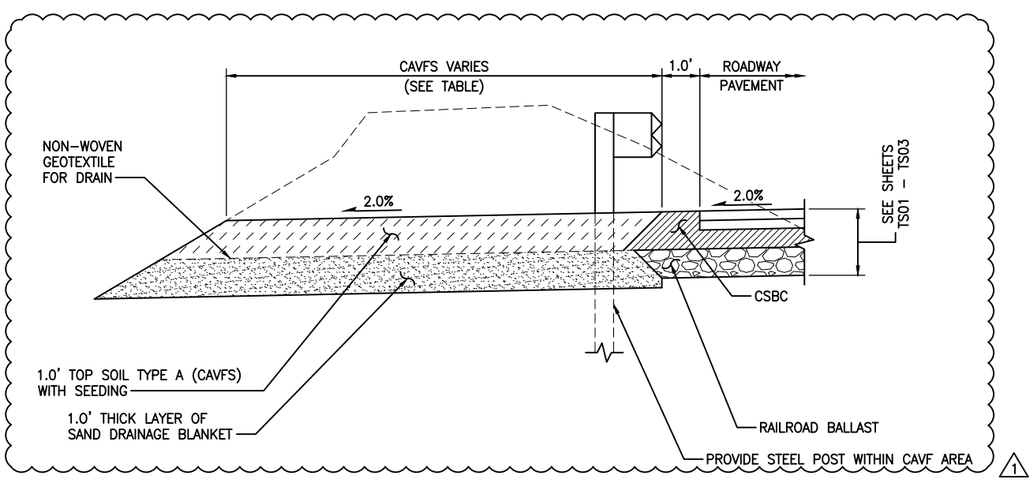

CAVFS DETAIL A

SCALE: 1"=2'

TS01 - TS03

CAVFS LOCATION & WIDTH TABLE

STATION	WIDTH	
STA 10+75 – STA 11+43	3.0'	
STA 11+43 – STA 12+04	5.0'	
STA 12+04 – STA 13+35	3.0'	1
STA 13+35 – STA 14+25	17.0' AVG.	
STA 14+25 – STA 15+50	3.0'	
STA 15+50 – STA 15+60	5.0'	1
STA 20+20 – STA 23+95	16.0' AVG.	
STA 27+75 – STA 28+18	3.0'	
STA 29+68 – STA 30+05	3.0'	
STA 35+70 – STA 45+30	3.0'	1
STA 45+30 – STA 46+40	20.0' AVG.	
STA 46+40 – STA 46+70	3.0'	
STA 46+70 – STA 47+35	10.0' AVG.	
STA 47+35 – STA 51+00	3.0'	
STA 51+00 – STA 51+20	5.0'	1

PLAN CHECK	BY	DATE
PRINTED	--	12/16/20

CHANGE ORDER #5
2/11/2022
Page 8 of 15

DATE	NO.	REVISION	BY
6/18/21	1	REVISION 4	KG ST

Last Saved by: USKG675404 on: Jun 18, 2021 3:40 PM

REGION NO.	STATE	FED. AID PROJ. NO.	SURVEY NO.
10	WASH.	ER-0701(063)	4178

DESIGNED BY: JCR
DRAWN BY: JCR
FIELD BOOK(S):
UPI# 06-0150

WSP USA Inc.
33301 9th Avenue South
Suite 300
Federal Way, WA 98003-2600
TEL: (206) 431-2300
FAX: (206) 431-2250

STUART C. BENNION
STATE OF WASHINGTON
41778
PROFESSIONAL ENGINEER
6/18/2021

APPROVED FOR CONSTRUCTION

DOUGLAS W. McCORMICK, P.E.
SNOHOMISH COUNTY ENGINEER

DATE APPROVED:

SNOHOMISH COUNTY
DEPARTMENT OF
PUBLIC WORKS

FUNDING NO. RC1532

INDEX–GALENA ROAD
FLOOD REPAIR MP 6.4–6.9

ROADWAY & GRADING
SECTIONS – SHEET 6

REFERENCE SHEET NO.
TS06

SHEET 68 OF 222 SHEETS

Last Saved by: USKG675404 on: Jun 18, 2021 3:40 PM File: C:\Users\USKG675404\WSP O365\Civil-FederalWay - Projects\A14.0072\CADD\Dwgs\06_TS06.dwg

Copyright © WSP USA Inc. All Rights Reserved.

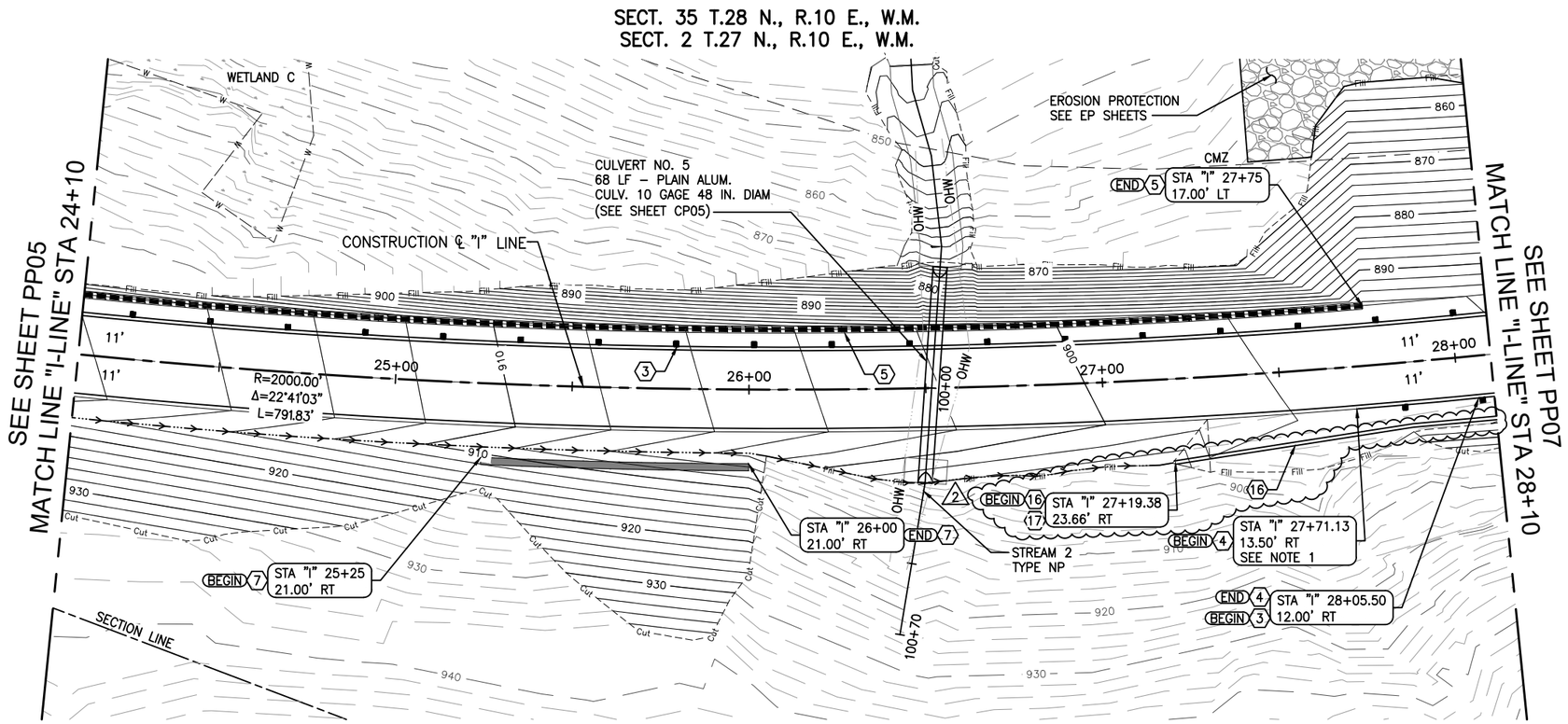

PLAN

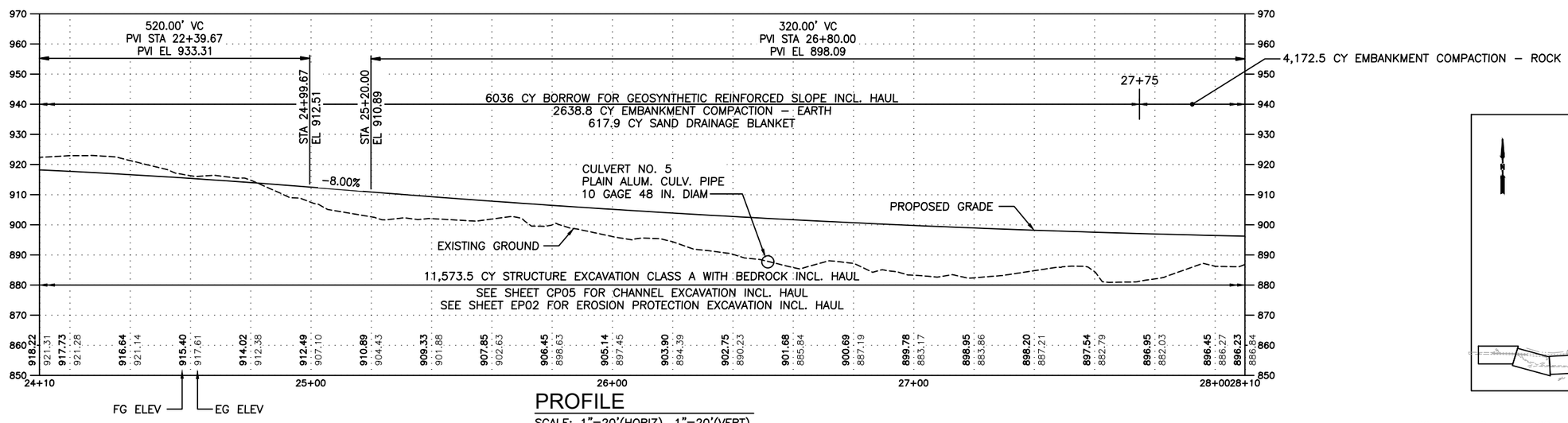

PROFILE

SCALE: 1"=20'(HORIZ), 1"=20'(VERT)
(I–LINE)

CONSTRUCTION NOTES

3. BEAM GUARDRAIL TYPE 31 PER WSDOT STD. PLAN C–20.10
4. BEAM GUARDRAIL NON–FLARED TERMINAL MSKT–SP MGS (TL–2) OR EQUIVALENT, PER WSDOT STD. PLAN C–22.45
5. GEOSYNTHETIC REINFORCED SLOPE WALL. SEE WS SHEETS FOR DETAIL.
7. POTENTIAL ROCK WALL FOR CUT SLOPES. SEE SHEET WP03 FOR DETAIL.
16. UNDERDRAIN PIPE 12 IN. DIAM. PER SPEC SECTION 7–01. ADJUST IN FIELD
17. CULVERT END WITH 3:1 SLOPE. SEE SNOHOMISH COUNTY STANDARD DETAIL 5–050.

2

LEGEND

- ROW LINE
- FILL LINE
- CUT LINE
- DITCH FLOW LINE
- WETLAND

GENERAL NOTES

1. STATIONING AND OFFSET IS TO APPROXIMATE FACE OF RAIL AT POST 1. SEE STANDARD PLANS.

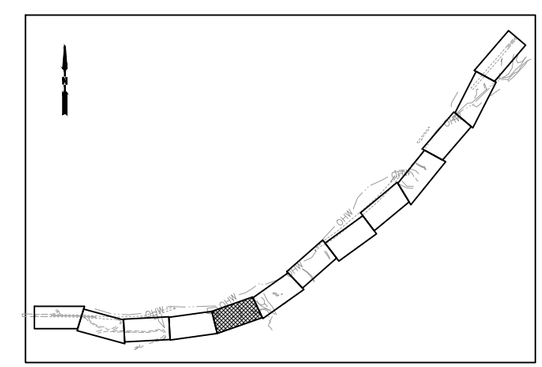

KEYPLAN

20 0 20 40
scale feet

PLAN CHECK	BY	DATE
PRINTED	--	12/16/20

CHANGE ORDER #5
2/11/2022
Page 9 of 15

DATE	NO.	REVISION	BY	
6/18/21	2	REVISION 4	KG	ST
1/22/21	1	ADDENDUM 3	KG	ST

Last Saved by: USKG675404 on: Jun 18, 2021 3:40 PM

REGION NO.	STATE	FED. AID PROJ. NO.	SURVEY NO.
10	WASH.	ER–0701(063)	4178

DESIGNED BY: JCR
DRAWN BY: JCR
FIELD BOOK(S):
UPI# 06–0150

WSP USA Inc.
33301 9th Avenue South
Suite 300
Federal Way, WA 98003-2600
TEL: (206) 431-2300
FAX: (206) 431-2250

STUART C. BENNITON — STATE OF WASHINGTON — 41778 — STRUCTURAL ENGINEER — PROFESSIONAL ENGINEER
6/18/2021

APPROVED FOR CONSTRUCTION
DOUGLAS W. McCORMICK, P.E.
SNOHOMISH COUNTY ENGINEER
DATE APPROVED:

SNOHOMISH COUNTY DEPARTMENT OF PUBLIC WORKS
FUNDING NO. RC1532

INDEX–GALENA ROAD
FLOOD REPAIR MP 6.4–6.9
ROADWAY PLAN & PROFILE
STATION 24+10 TO 28+10

REFERENCE SHEET NO. PP06
SHEET 77 OF 222 SHEETS

Last Saved by: USKG675404 on: Jun 18, 2021 3:40 PM File: C:\Users\USKG675404\WSP O365\Civil-FederalWay - Projects\A14.0072\CADD\Dwgs\08_PP06.dwg

Copyright © WSP USA Inc. All Rights Reserved.

SECTS. 35,36 T.28 N., R.10 E., W.M.

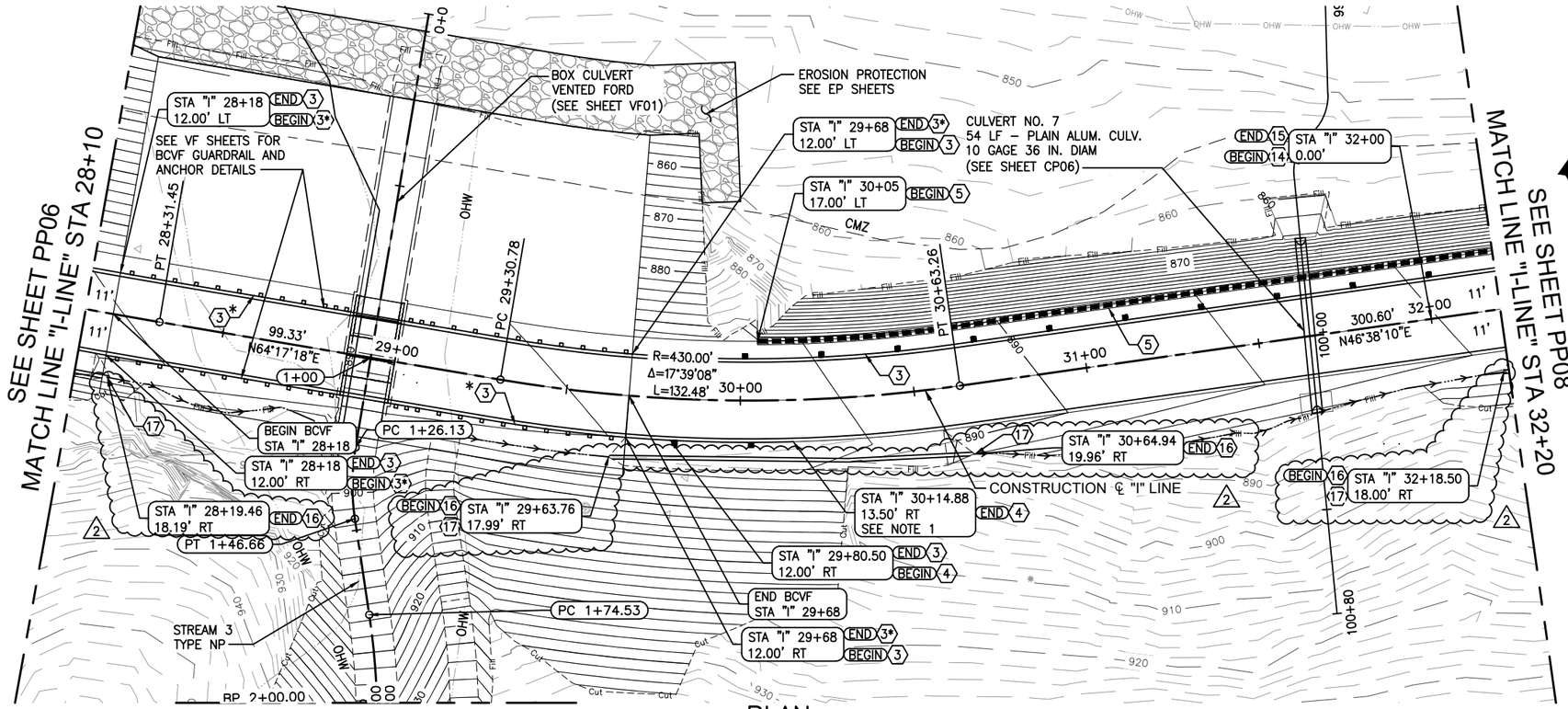

PLAN

CONSTRUCTION NOTES

3. BEAM GUARDRAIL TYPE 31 PER WSDOT STD. PLAN C–20.10 * SEE VF SHEETS FOR GUARDRAIL CONNECTION TO BCVF.
4. BEAM GUARDRAIL NON–FLARED TERMINAL MSKT–SP MGS (TL–2) OR EQUIVALENT, PER WSDOT STD. PLAN C–22.45
5. GEOSYNTHETIC REINFORCED SLOPE WALL. SEE WS SHEETS FOR DETAIL.
14. STRUCTURE EXCAVATION CLASS A WITH ROCK INCL. HAUL
15. STRUCTURE EXCAVATION CLASS A WITH BEDROCK INCL. HAUL
16. UNDERDRAIN PIPE 12 IN. DIAM. PER SPEC SECTION 7–01. ADJUST IN FIELD
17. CULVERT END WITH 3:1 SLOPE. SEE SNOHOMISH COUNTY STANDARD DETAIL 5–050.

LEGEND

- ROW LINE
- FILL LINE
- CUT LINE
- DITCH FLOW LINE

GENERAL NOTES

1. STATIONING AND OFFSET IS TO APPROXIMATE FACE OF RAIL AT POST 1. SEE STANDARD PLANS.

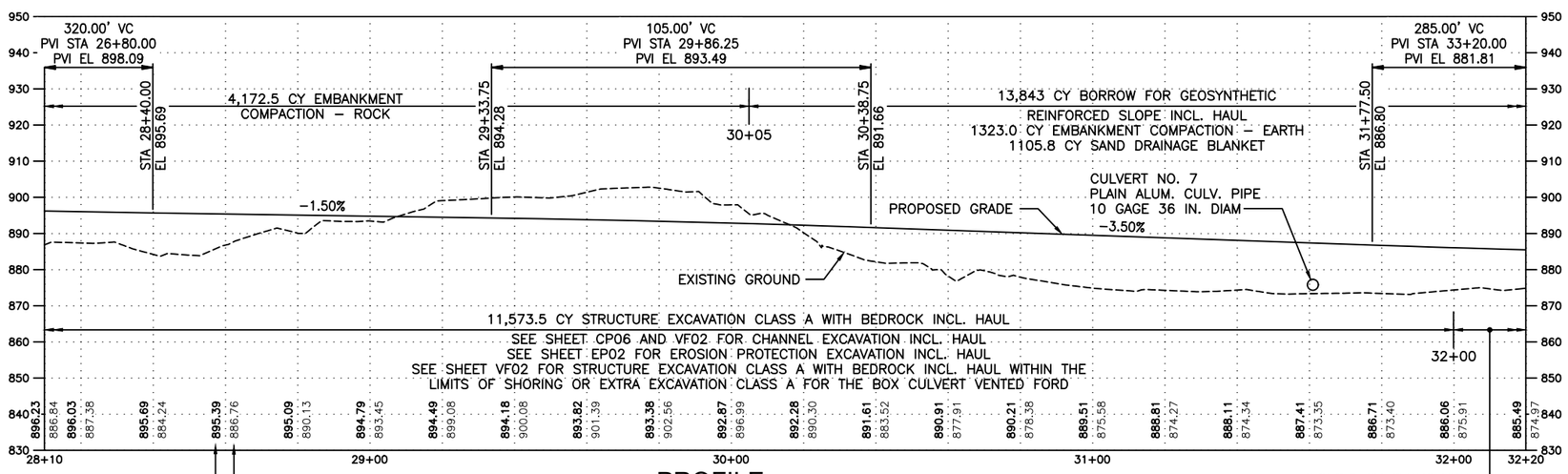

PROFILE

SCALE: 1"=20'(HORIZ), 1"=20'(VERT) (I–LINE)

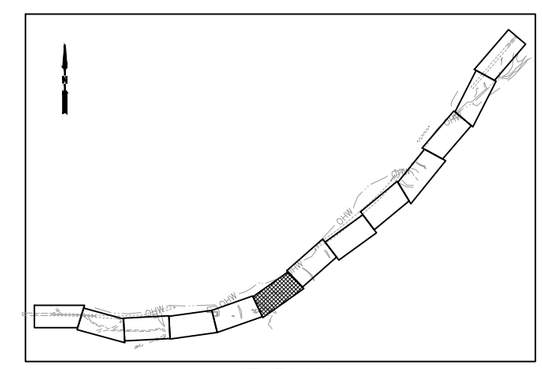

KEYPLAN

20 0 20 40 scale feet

PLAN CHECK	BY	DATE
PRINTED	--	12/16/20

CHANGE ORDER #5
2/11/2022
Page 10 of 15

DATE	NO.	REVISION	BY	
6/18/21	2	REVISION 4	KG	ST
1/22/21	1	ADDENDUM 3	KG	ST

Last Saved by: USKG675404 on: Jun 18, 2021 3:41 PM

REGION NO.	STATE	FED. AID PROJ. NO.	SURVEY NO.
10	WASH.	ER–0701(063)	4178

DESIGNED BY: JCR
DRAWN BY: JCR
FIELD BOOK(S):
UPI# 06–0150

WSP USA Inc.
33301 9th Avenue South
Suite 300
Federal Way, WA 98003-2600
TEL: (206) 431-2300
FAX: (206) 431-2250

STUART C. BENNION — STATE OF WASHINGTON — 41778 — PROFESSIONAL ENGINEER — 6/18/2021

APPROVED FOR CONSTRUCTION

DOUGLAS W. McCORMICK, P.E.
SNOHOMISH COUNTY ENGINEER

DATE APPROVED:

SNOHOMISH COUNTY DEPARTMENT OF PUBLIC WORKS

FUNDING NO. RC1532

INDEX–GALENA ROAD
FLOOD REPAIR MP 6.4–6.9

ROADWAY PLAN & PROFILE
STATION 28+10 TO 32+20

REFERENCE SHEET NO. PP07

SHEET 78 OF 222 SHEETS

Last Saved by: USKG675404 on: Jun 18, 2021 3:41 PM File: C:\Users\USKG675404\WSP O365\Civil-FederalWay - Projects\A14.0072\CADD\Dwgs\08_PP07.dwg

Copyright © WSP USA Inc. All Rights Reserved.

SECTS. 35,36 T.28 N., R.10 E., W.M.

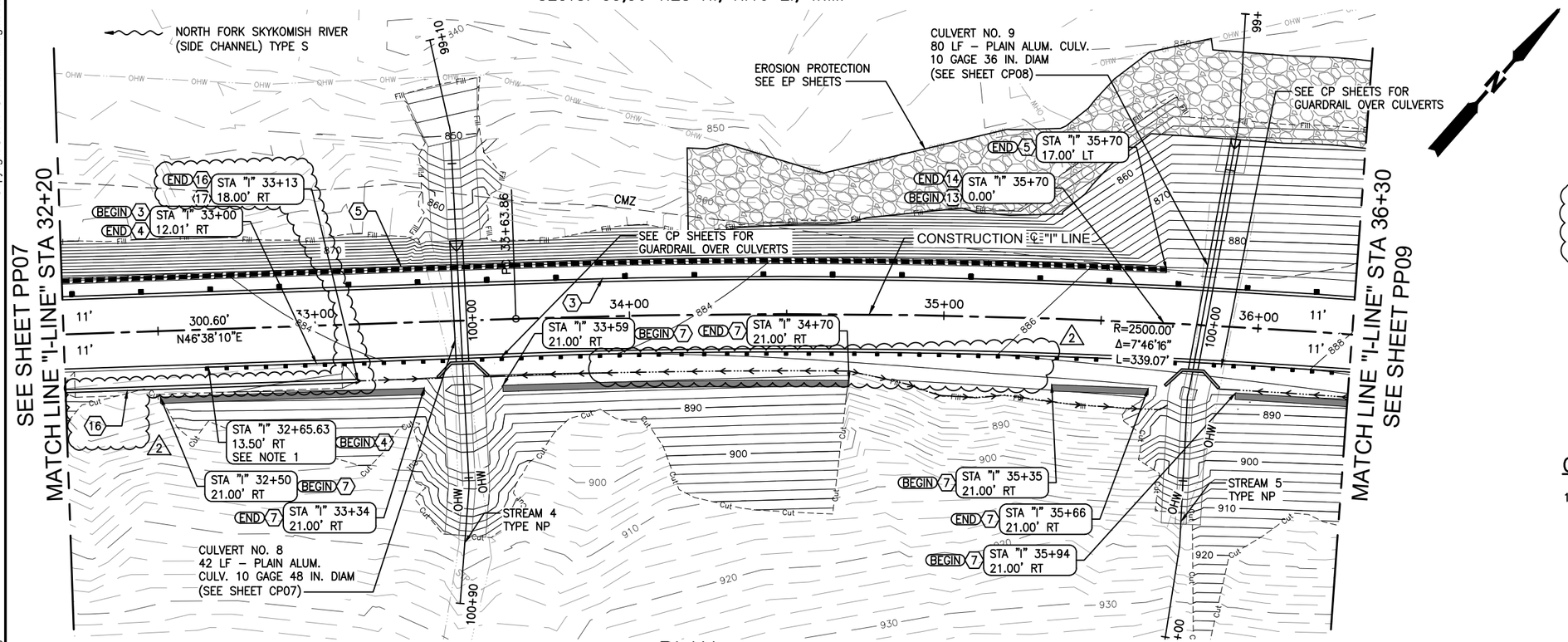

PLAN

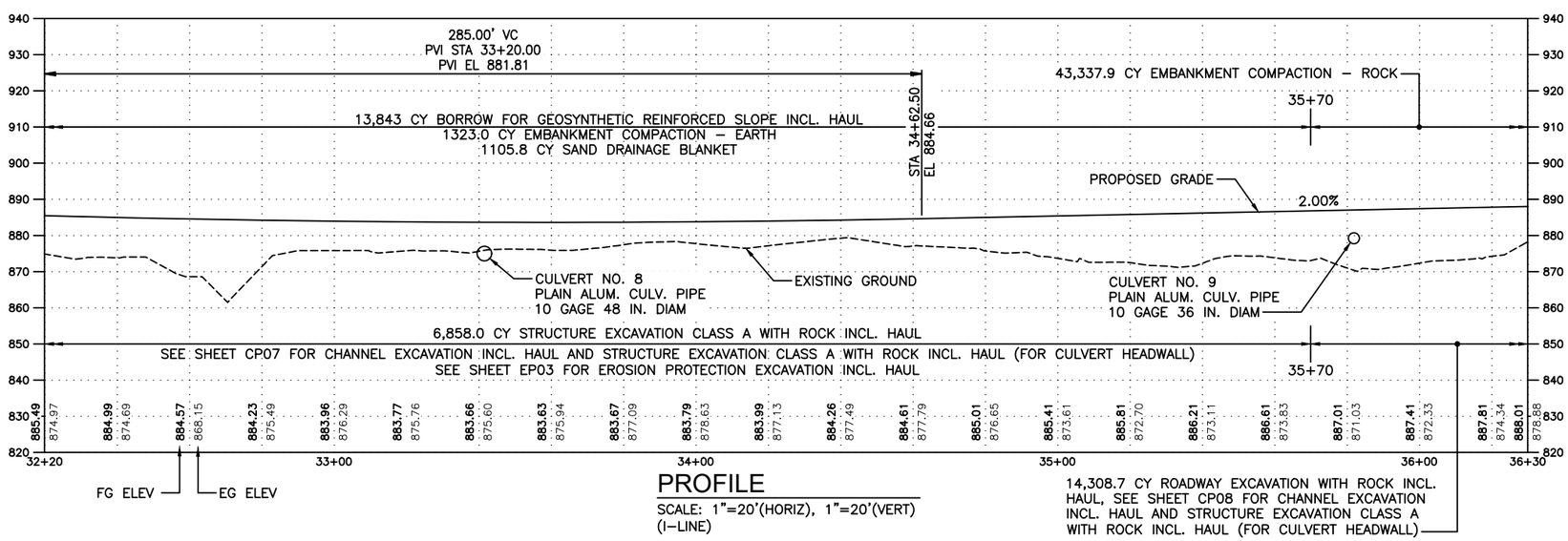

PROFILE

SCALE: 1"=20'(HORIZ), 1"=20'(VERT)
(I–LINE)

CONSTRUCTION NOTES

3. BEAM GUARDRAIL TYPE 31 PER WSDOT STD. PLAN C–20.10
4. BEAM GUARDRAIL NON–FLARED TERMINAL MSKT–SP MGS (TL–2), OR EQUIVALENT, PER WSDOT STD. PLAN C–22.45.
5. GEOSYNTHETIC REINFORCED SLOPE WALL. SEE WS SHEETS FOR DETAIL.
7. POTENTIAL ROCK WALL FOR CUT SLOPES. SEE SHEET WP03 FOR DETAIL.
13. ROADWAY EXCAVATION WITH ROCK INCL. HAUL
14. STRUCTURE EXCAVATION CLASS A WITH ROCK INCL. HAUL
16. UNDERDRAIN PIPE 12 IN. DIAM. PER SPEC SECTION 7–01. ADJUST IN FIELD
17. CULVERT END WITH 3:1 SLOPE. SEE SNOHOMISH COUNTY STANDARD DETAIL 5–050.

2

LEGEND

- ROW LINE
- FILL LINE
- CUT LINE
- DITCH FLOW LINE

GENERAL NOTES

1. STATIONING AND OFFSET IS TO APPROXIMATE FACE OF RAIL AT POST 1. SEE STANDARD PLANS.

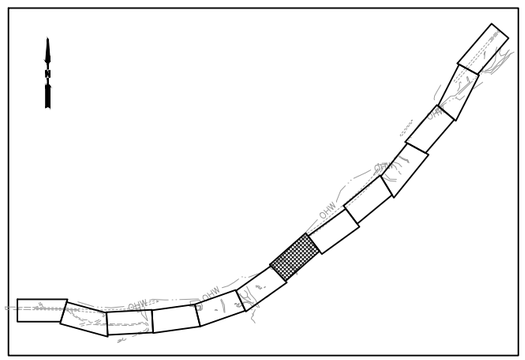

KEYPLAN

20 0 20 40
scale feet

PLAN CHECK	BY	DATE
PRINTED	--	12/16/20

CHANGE ORDER #5
2/11/2022
Page 11 of 15

DATE	NO.	REVISION	BY	
6/18/21	2	REVISION 4	KG	ST
1/22/21	1	ADDENDUM 3	KG	ST

Last Saved by: USKG675404 on: Jun 18, 2021 3:42 PM

REGION NO.	STATE	FED. AID PROJ. NO.	SURVEY NO.
10	WASH.	ER–0701(063)	4178

DESIGNED BY: JCR
DRAWN BY: JCR
FIELD BOOK(S):
UPI# 06–0150

WSP USA Inc.
33301 9th Avenue South
Suite 300
Federal Way, WA 98003-2600
TEL: (206) 431-2300
FAX: (206) 431-2250

STUART C. BENNION
STATE OF WASHINGTON
4178
PROFESSIONAL ENGINEER
6/18/2021

APPROVED FOR CONSTRUCTION

DOUGLAS W. McCORMICK, P.E.
SNOHOMISH COUNTY ENGINEER

DATE APPROVED:

SNOHOMISH COUNTY DEPARTMENT OF PUBLIC WORKS

FUNDING NO. RC1532

INDEX–GALENA ROAD
FLOOD REPAIR MP 6.4–6.9

ROADWAY PLAN & PROFILE
STATION 32+20 TO 36+30

REFERENCE SHEET NO. PP08

SHEET 79 OF 222 SHEETS

Last Saved by: USKG675404 on: Jun 18, 2021 3:42 PM File: C:\Users\USKG675404\WSP O365\Civil-FederalWay - Projects\A14.0072\CADD\Dwgs\08_PP08.dwg

Copyright © WSP USA Inc. All Rights Reserved.

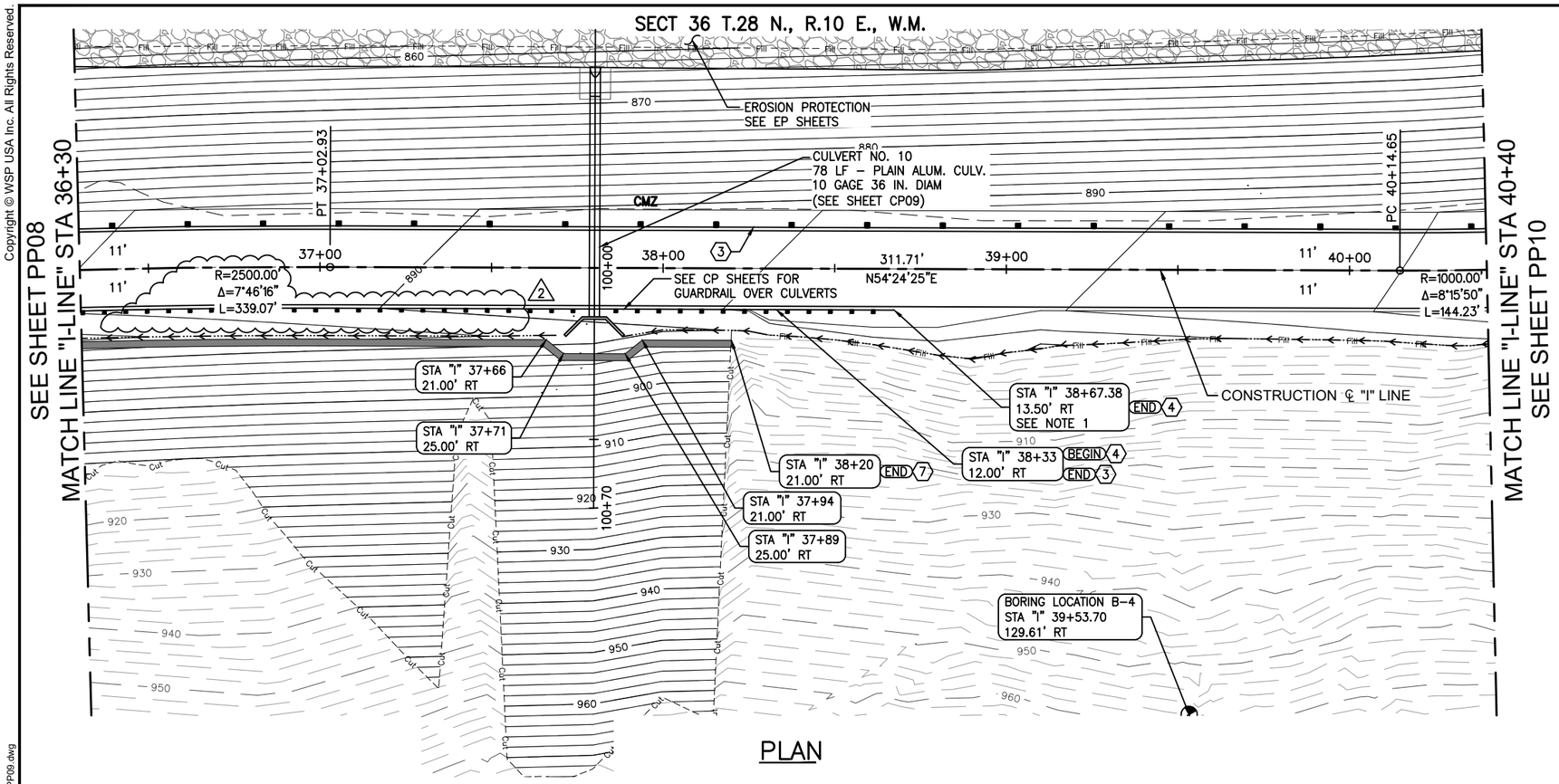

PLAN

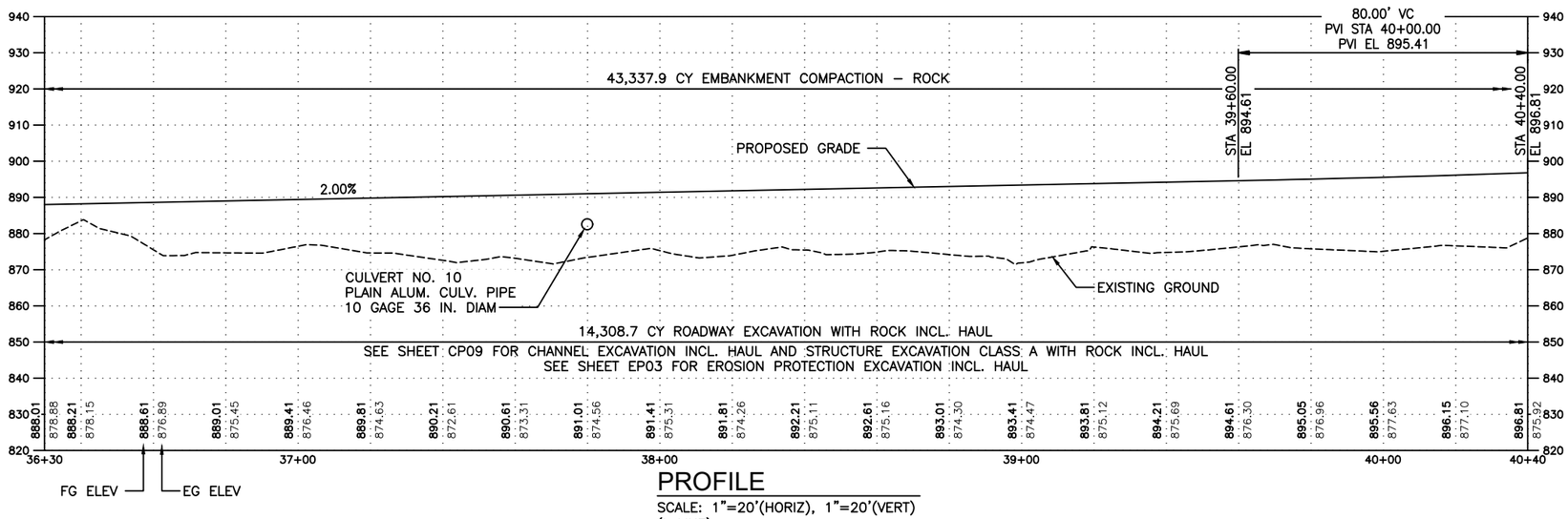

PROFILE

SCALE: 1"=20'(HORIZ), 1"=20'(VERT)
(I-LINE)

CONSTRUCTION NOTES

3. BEAM GUARDRAIL TYPE 31 PER WSDOT STD. PLAN C-20.10
4. BEAM GUARDRAIL NON-FLARED TERMINAL MSKT-SP MGS (TL-2), OR EQUIVALENT, PER WSDOT STD. PLAN C-22.45.
7. POTENTIAL ROCK WALL FOR CUT SLOPES. SEE SHEET WP03 FOR DETAIL.

LEGEND

- ROW LINE
- FILL LINE
- CUT LINE
- DITCH FLOW LINE

GENERAL NOTES

1. STATIONING AND OFFSET IS TO APPROXIMATE FACE OF RAIL AT POST 1. SEE STANDARD PLANS.

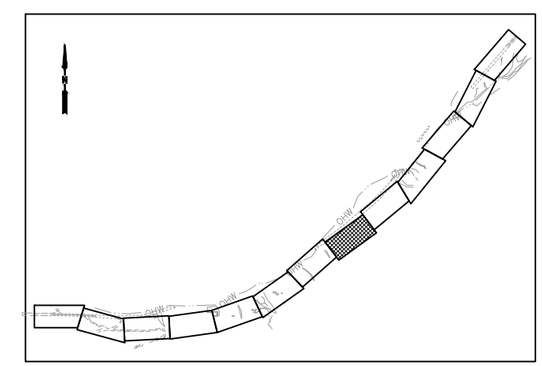

KEYPLAN

20 0 20 40
scale feet

PLAN CHECK	BY	DATE
PRINTED	--	12/16/20

CHANGE ORDER #5
2/11/2022
Page 12 of 15

DATE	NO.	REVISION	BY	
6/18/21	2	REVISION 4	KG	ST
1/22/21	1	ADDENDUM 3	KG	ST

Last Saved by: USKG675404 on: Jun 18, 2021 3:42 PM

REGION NO.	STATE	FED. AID PROJ. NO.	SURVEY NO.
10	WASH.	ER-0701(063)	4178

DESIGNED BY: JCR
DRAWN BY: JCR
FIELD BOOK(S):
UPI# 06-0150

WSP USA Inc.
33301 9th Avenue South
Suite 300
Federal Way, WA 98003-2600
TEL: (206) 431-2300
FAX: (206) 431-2250

STUART C. BENNION
STATE OF WASHINGTON
4178
PROFESSIONAL ENGINEER
6/18/2021

APPROVED FOR CONSTRUCTION

DOUGLAS W. McCORMICK, P.E.
SNOHOMISH COUNTY ENGINEER

DATE APPROVED:

SNOHOMISH COUNTY
DEPARTMENT OF
PUBLIC WORKS

FUNDING NO. RC1532

INDEX-GALENA ROAD
FLOOD REPAIR MP 6.4-6.9

ROADWAY PLAN & PROFILE
STATION 36+30 TO 40+40

REFERENCE SHEET NO. PP09

SHEET 80 OF 222 SHEETS

Last Saved by: USKG675404 on: Jun 18, 2021 3:42 PM File: C:\Users\USKG675404\WSP O365\Civil-FederalWay - Projects\A14.0072\CADD\Dwgs\08_PP09.dwg

Copyright © WSP USA Inc. All Rights Reserved.

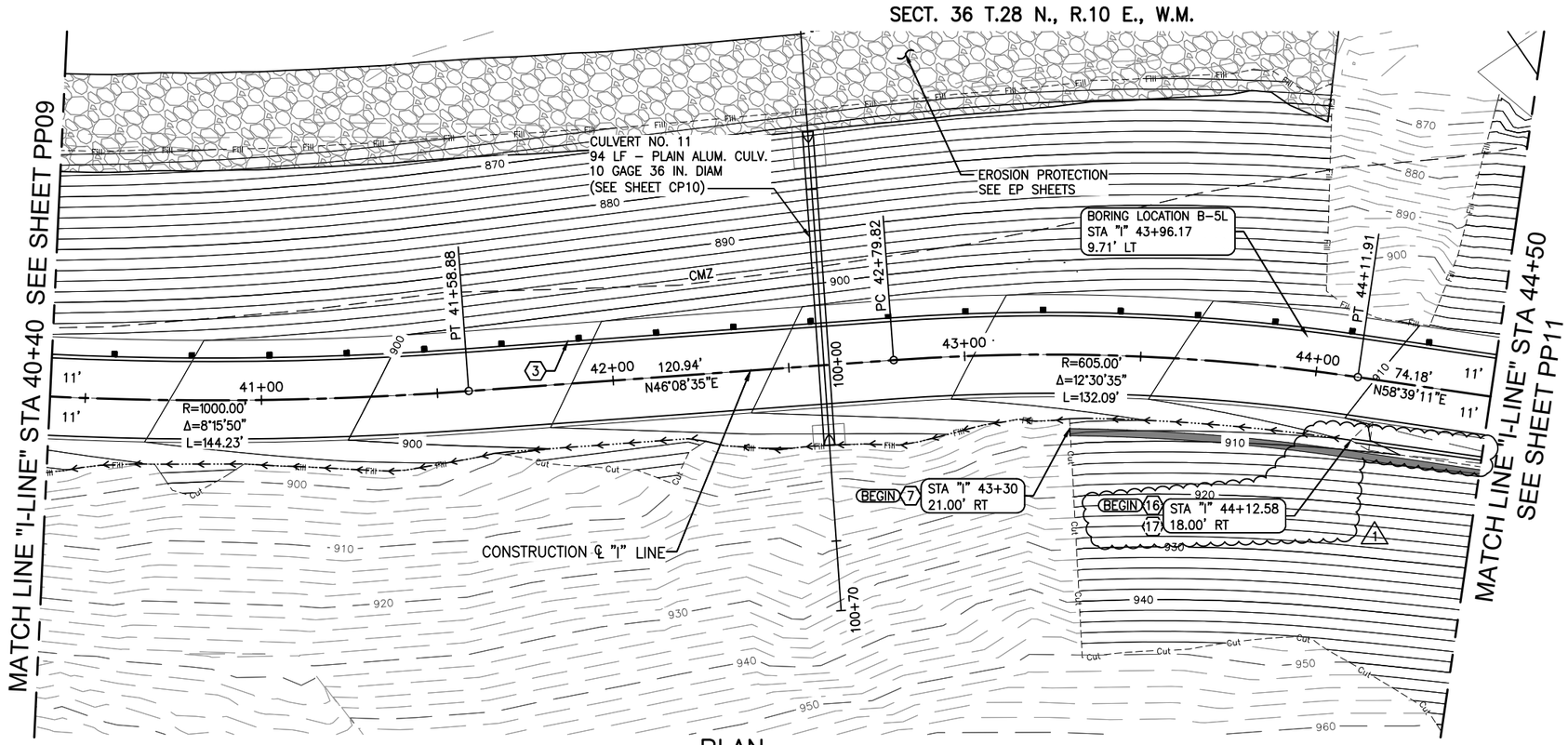

PLAN

CONSTRUCTION NOTES

3. BEAM GUARDRAIL TYPE 31 PER WSDOT STD. PLAN C-20.10
7. POTENTIAL ROCK WALL FOR CUT SLOPES. SEE SHEET WP03 FOR DETAIL.
16. UNDERDRAIN PIPE 12 IN. DIAM. PER SPEC SECTION 7-01. ADJUST IN FIELD
17. CULVERT END WITH 3:1 SLOPE. SEE SNOHOMISH COUNTY STANDARD DETAIL 5-050.

1

LEGEND

- ROW LINE
- FILL LINE
- CUT LINE
- DITCH FLOW LINE
- WETLAND

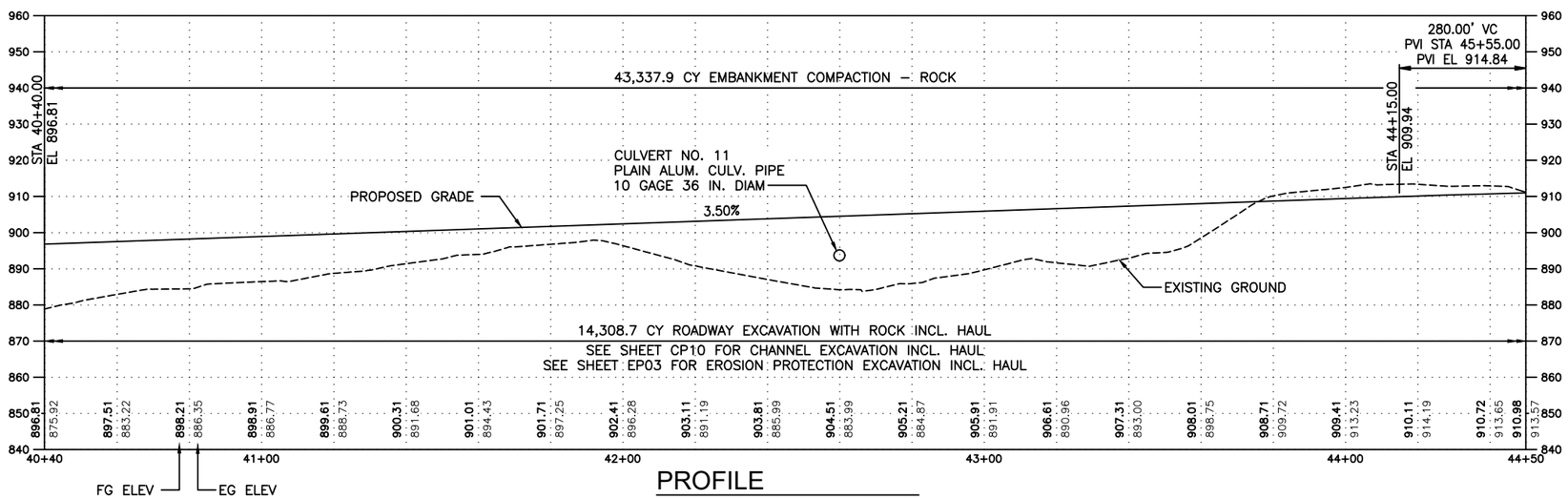

PROFILE

SCALE: 1"=20'(HORIZ), 1"=20'(VERT)
(I-LINE)

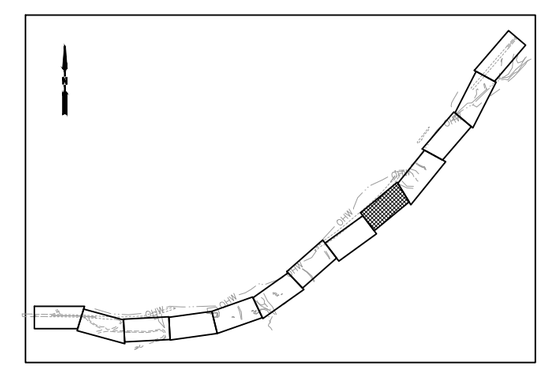

KEYPLAN

20 0 20 40
scale feet

PLAN CHECK	BY	DATE
PRINTED	--	12/16/20

CHANGE ORDER #5
2/11/2022
Page 13 of 15

DATE	NO.	REVISION	BY
6/18/21	1	REVISION 4	KG ST

Last Saved by: USKG675404 on: Jun 18, 2021 3:43 PM

REGION NO.	STATE	FED. AID PROJ. NO.	SURVEY NO.
10	WASH.	ER-0701(063)	4178

DESIGNED BY: JCR
DRAWN BY: JCR
FIELD BOOK(S):
UPI# 06-0150

WSP USA Inc.
33301 9th Avenue South
Suite 300
Federal Way, WA 98003-2600
TEL: (206) 431-2300
FAX: (206) 431-2250

STUART C. BENNION
STATE OF WASHINGTON
4178
PROFESSIONAL ENGINEER
6/18/2021

APPROVED FOR CONSTRUCTION

DOUGLAS W. McCORMICK, P.E.
SNOHOMISH COUNTY ENGINEER

DATE APPROVED:

SNOHOMISH COUNTY DEPARTMENT OF PUBLIC WORKS

FUNDING NO. RC1532

INDEX-GALENA ROAD
FLOOD REPAIR MP 6.4-6.9

ROADWAY PLAN & PROFILE
STATION 40+40 TO 44+50

REFERENCE SHEET NO. PP10

SHEET 81 OF 222 SHEETS

Last Saved by: USKG675404 on: Jun 18, 2021 3:43 PM File: C:\Users\USKG675404\WSP O365\Civil-FederalWay - Projects\A14.0072\CADD\Dwgs\08_PP10.dwg

Copyright © WSP USA Inc. All Rights Reserved.

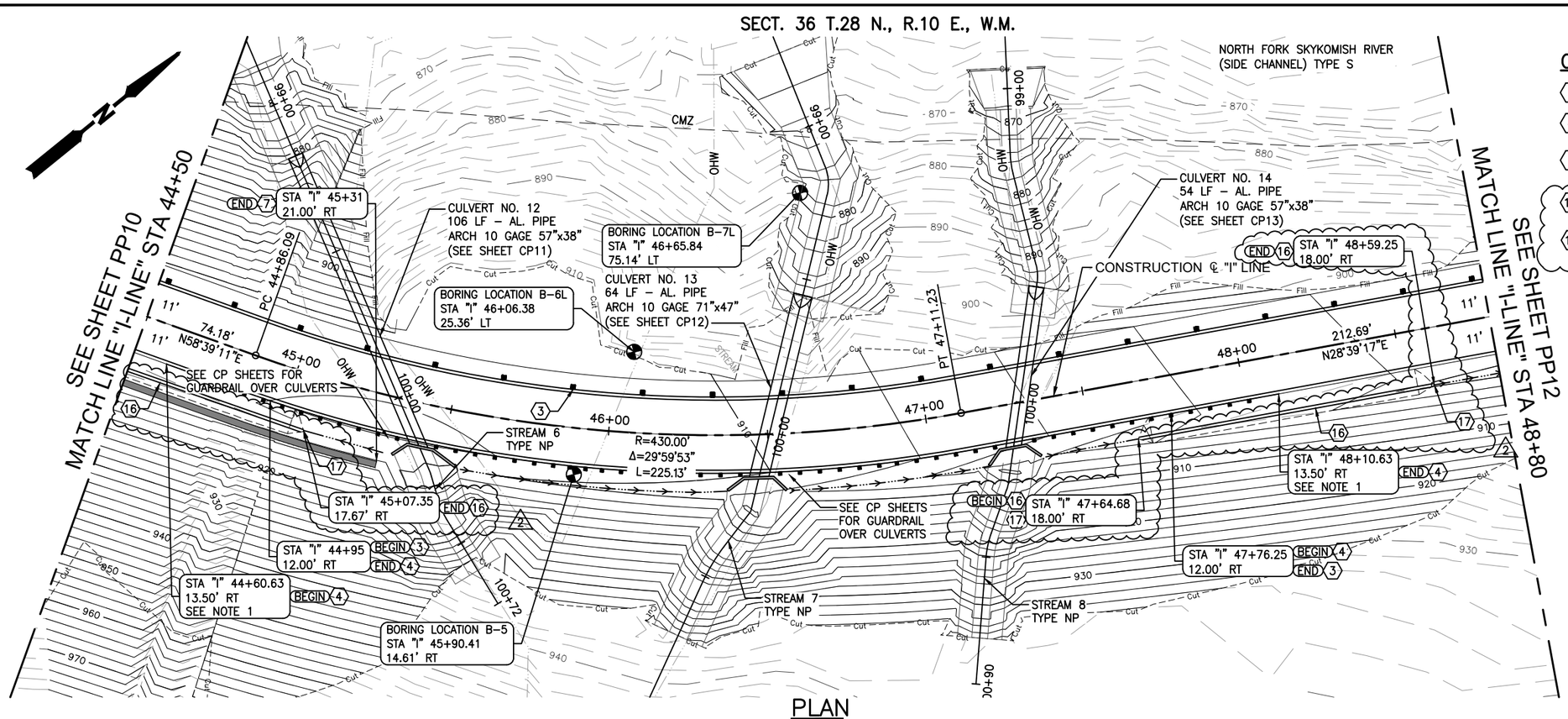

PLAN

CONSTRUCTION NOTES

3. BEAM GUARDRAIL TYPE 31 PER WSDOT STD. PLAN C-20.10
4. BEAM GUARDRAIL NON-FLARED TERMINAL MSKT-SP MGS (TL-2), OR EQUIVALENT, PER WSDOT STD. PLAN C-22.45
7. POTENTIAL ROCK WALL FOR CUT SLOPES. SEE SHEET WP03 FOR DETAIL.
16. UNDERDRAIN PIPE 12 IN. DIAM. PER SPEC SECTION 7-01. ADJUST IN FIELD
17. CULVERT END WITH 3:1 SLOPE. SEE SNOHOMISH COUNTY STANDARD DETAIL 5-050.

LEGEND

- ROW LINE
- FILL LINE
- CUT LINE
- DITCH FLOW LINE

GENERAL NOTES

1. STATIONING AND OFFSET IS TO APPROXIMATE FACE OF RAIL AT POST 1. SEE STANDARD PLANS.

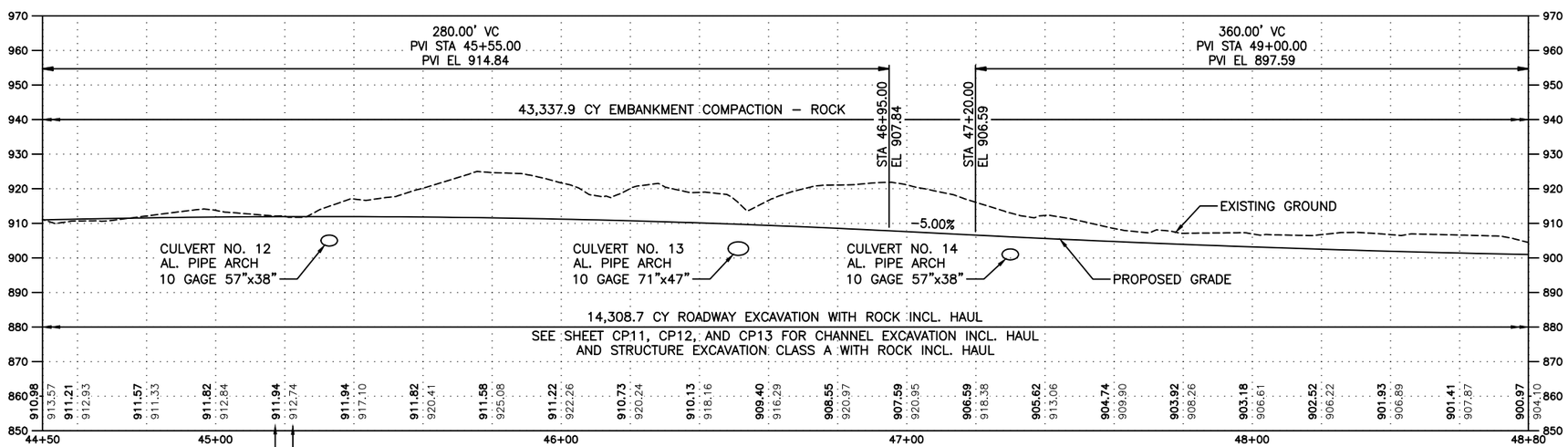

PROFILE

SCALE: 1"=20'(HORIZ), 1"=20'(VERT)
(I-LINE)

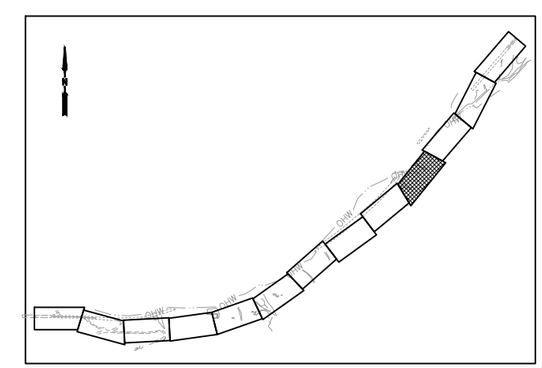

KEYPLAN

20 0 20 40
scale feet

PLAN CHECK	BY	DATE
PRINTED	--	12/16/20

CHANGE ORDER #5
2/11/2022
Page 14 of 15

DATE	NO.	REVISION	BY	
6/18/21	2	REVISION 4	KG	ST
1/22/21	1	ADDENDUM 3	KG	ST

Last Saved by: USKG675404 on: Jun 18, 2021 3:44 PM

REGION NO.	STATE	FED. AID PROJ. NO.	SURVEY NO.
10	WASH.	ER-0701(063)	4178

DESIGNED BY: JCR
DRAWN BY: JCR
FIELD BOOK(S):
UPI# 06-0150

WSP USA Inc.
33301 9th Avenue South
Suite 300
Federal Way, WA 98003-2600
TEL: (206) 431-2300
FAX: (206) 431-2250

STUART C. BENNION, STATE OF WASHINGTON, 41778, PROFESSIONAL ENGINEER
6/18/2021

APPROVED FOR CONSTRUCTION

DOUGLAS W. McCORMICK, P.E.
SNOHOMISH COUNTY ENGINEER

DATE APPROVED:

SNOHOMISH COUNTY DEPARTMENT OF PUBLIC WORKS

FUNDING NO. RC1532

INDEX-GALENA ROAD
FLOOD REPAIR MP 6.4-6.9

ROADWAY PLAN & PROFILE
STATION 44+50 TO 48+80

REFERENCE SHEET NO. PP11

SHEET 82 OF 222 SHEETS

Last Saved by: USKG675404 on: Jun 18, 2021 3:44 PM File: C:\Users\USKG675404\WSP O365\Civil-FederalWay - Projects\A14.0072\CADD\Dwgs\08_PP11.dwg

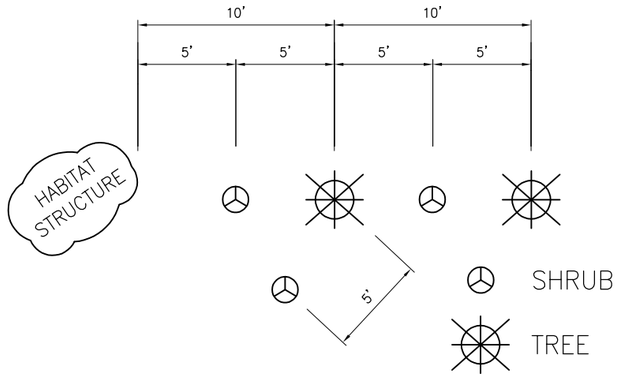

TYPICAL PLANT SPACING FOR PLANTING AREA A, B, & C:

PLANT TREES NO CLOSER THAN 10 FT. SPACING TO OTHER TREES.
PLANT SHRUBS NO CLOSER THAN 5 FT. SPACING TO TREES, HABITAT STRUCTURES OR OTHER SHRUBS.
TREE AND SHRUB SPECIES SHALL BE INSTALLED IN GROUPS OF 3 TO 8 PLANTS.

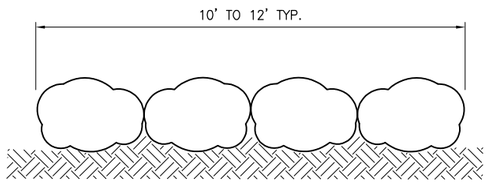

BOULDER BARRIER

EACH PLACEMENT SHALL HAVE MIN. 6 CY OF ROCK.
MINIMUM DIMENSION OF ROCK SHALL BE 36 INCHES.

PLANTING NOTES:

1. ENGINEER TO APPROVE GRADING AND PLANTING AREA PREPARATION BEFORE PLANT INSTALLATION.
2. DISCREPANCIES BETWEEN PLANS AND SITE CONDITIONS SHALL BE BROUGHT TO THE ATTENTION OF THE ENGINEER PRIOR TO PROCEEDING.
3. LAYOUT OF THE PLANTING AREA SHALL BE APPROVED BY ENGINEER PRIOR TO PLANT INSTALLATION.
4. THE BACKFILL MATERIAL AND ROOT BALL SHALL BE THOROUGHLY WATERED ON THE SAME DAY THAT PLANTING OCCURS REGARDLESS OF SEASON.
5. ALL DIMENSIONS FOR PLANT HEIGHT OR SPREAD ARE MINIMUM REQUIREMENTS.
6. WESTERN RED CEDAR SHOULD BE PLANTED IN SHADY LOCATIONS OR TO THE NORTH OF ALDER, COTTONWOOD OR WILLOW.
7. PACIFIC YEW SHOULD BE PLANTED TO THE NORTH OF A HABITAT BRUSH PILE.
8. SWORD FERN SHOULD BE PLANTED IN SHADE OF HABITAT STRUCTURES.

PLUG PLANTING NOTES:

1. STAGE WELL-WATERED (SOAKED) PLUGS ADJACENT TO THE AREA TO BE PLANTED.
2. MAKE A VERTICAL HOLE WITH A DIBBLE THAT MATCHES THE EXACT SIZE AND SHAPE OF THE PLUG.
3. PLACE A PLUG INTO THE DIBBLE HOLE SO THAT THE ROOT CROWN IS LEVEL WITH OR IMMEDIATELY BELOW THE SURFACE. DO NOT FORCE ROOTS INTO AN UNDERSIZED HOLE.
4. FIRMLY PACK THE EARTH AROUND THE PLANT TO SEAT THE PLUG AND ENSURE FULL CONTACT WITH THE ADJACENT SOIL.
5. COVER ANY EXPOSED PLUG POTTING SOIL WITH ADJACENT SITE SOIL TO PREVENT ROOT DEHYDRATION THROUGH SURFACE WICKING.
6. WATER PLUGS IMMEDIATELY AFTER INSTALLATION.

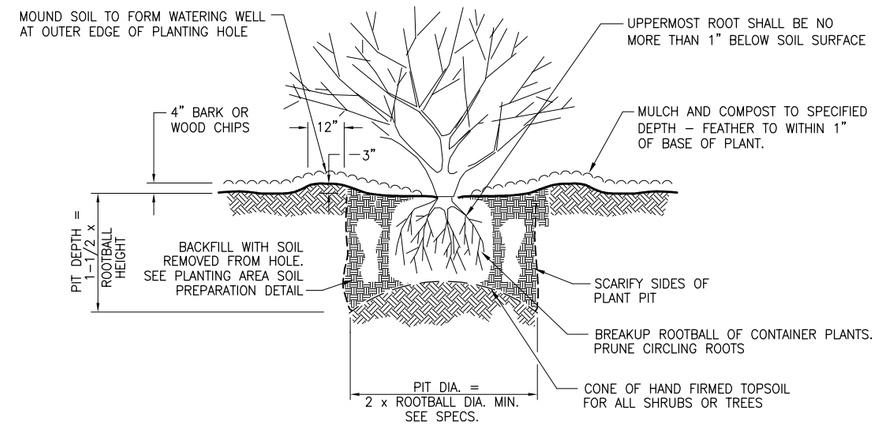

SHRUB OR TREE PLANTING DETAIL

N.T.S.

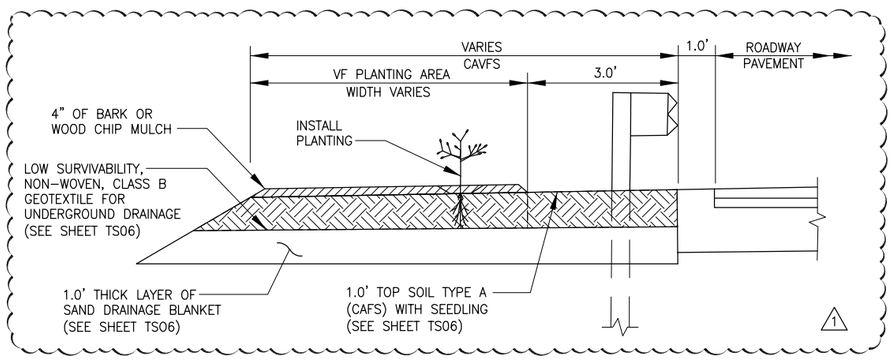

VF PLANTING AREAS	
STATION	WIDTH
13+35 – 14+25	17' AVG.
20+20 – 23+95	16' AVG.
45+30 – 46+40	20' AVG.

PLANTING AREA "VF" DETAIL

N.T.S.

NOTE: COORDINATE THE "VF" PLANTING WITH THE CAVFS DETAIL ON SHEET TS06.

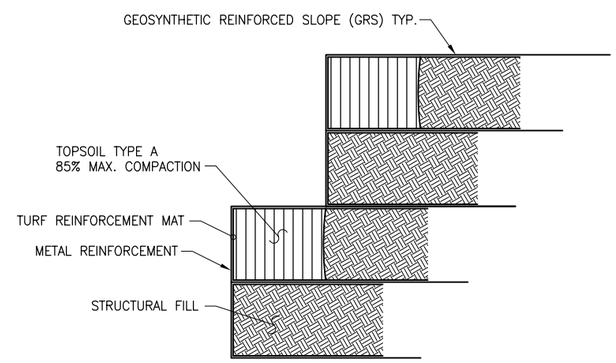

EXISTING:

GRS DETAILS ARE SHOWN ELSEWHERE.

COORDINATE PLANTING WITH APPROVED GRS DETAILS.

PLANTING AREA "E" SOIL PREPARATION – GRS WALL

N.T.S.

NOTE: SEE WSDOT STANDARD PLAN H-10.15-00 FOR LIVE STAKE PLANTING DETAILS.

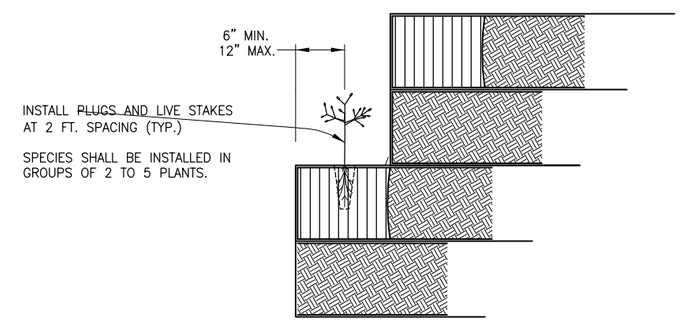

STEP 1

COMPLETE PLANTING DURING PLANTING WINDOW.

CUT TURF REINF. MAT.

USE PROPER SIZE DIBBLE FOR DIGGING HOLE FOR PLUG.

INSTALL PLANT PLUG OR LIVE STAKE.

FIRM SOIL AROUND PLUG OR LIVE STAKE.

NOTE:

PACIFIC WILLOW SHALL ONLY BE PLANTED ON THE BOTTOM STEP. VINE MAPLE, RED ELDERBERRY AND INDIAN PLUM SHALL ONLY BE PLANTED ON THE BOTTOM 3 STEPS.

PLAN CHECK	BY	DATE	DATE	NO.	REVISION	BY
			6/21/21	1	PLAN REVISION 4	LB

CHANGE ORDER #5
2/11/2022
Page 15 of 15

Last Saved By: spwgcl Jun 22, 2021 – 3:51pm

REGION NO.	STATE	FED. AID PROJ. NO.	SURVEY NO.
10	WASH	ER-0701(063)	4178

DESIGNED BY: D. BOYER
DRAWN BY: C. DYER
FIELD BOOK(S):
UPI# 06-0150

LARRY EDWARD BREWER, STATE OF WASHINGTON, 36437, REGISTERED PROFESSIONAL ENGINEER
6/23/2021

REVIEWED AND APPROVED FOR CONSTRUCTION

DOUGLAS W. McCORMICK, P.E.
SNOHOMISH COUNTY ENGINEER

DATE APPROVED:

SNOHOMISH COUNTY DEPARTMENT OF PUBLIC WORKS

FUNDING NO. RC1532

INDEX–GALENA ROAD
FLOOD REPAIR M.P. 6.4 – 6.9

PLANTING DETAILS

REFERENCE SHEET NO. MS04

SHEET 220 OF 222 SHEETS

Jun 22, 2021 - 3:52pm spwgcl \\snoco\ladrives\SPW_Data\PW_Project_Data_Management\6-PROJECTS_UPI Year_2006\06-015\02 CADD\2.1 production data\drawings\Design\Exhibits\Environ Dwgs\06-0150 Planting - 2017 DETAILS\01 9_13_18MH.dwg Layout Name: MS04